NIKKEN CNC ROTARY TABLE

CNC400HFA-APC-2

INDIVIDUAL INSTRUCTION MANUAL

EIGHTH EDITION

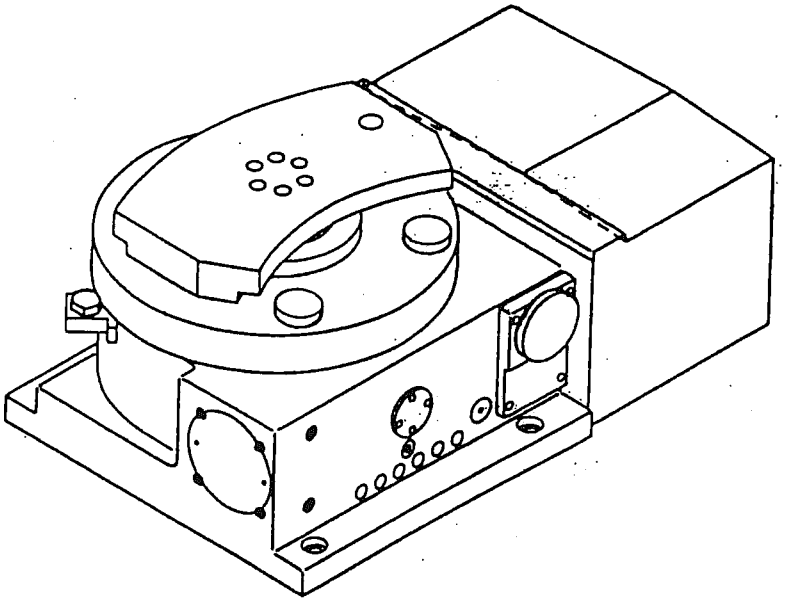

NIKKEN KOSAKUSHO WORKS., LTD.

5-1, 1chome,Minamishinden,Daito,Osaka, Japan

Tel:(072)869-5810 Fax:(072)869-6210

Contents

1. Preface

Thank you for your purchasing the NIKKEN CNC rotary table this time.

The NIKKEN CNC rotary table is always designed and manufactured on the basis of concept and intention to "make daily studies" in order to meet various requests and demands made by customers. The customers will be satisfied high performance, high quality, easy operation and economical price etc. offered by the NIKKEN CNC rotary table.

Although the NIKKEN CNC rotary table is durable for heavy duty cutting and long-term operation, please read through this "Instruction Manual" carefully before operating the NIKKEN CNC table.

We appreciate our connection with you through NIKKEN CNC rotary table and wish to enroll you in our customer list for future service activities. Please fill and mail the attached post card to us.

Please keep "Inspection Table", "Common Instruction Manual" and "Individual Instruction Manual" in your file. If there should happen any trouble on the rotary table, please advise us of all letters engraved on its name plate as shown below.

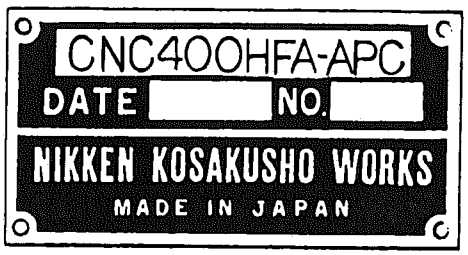

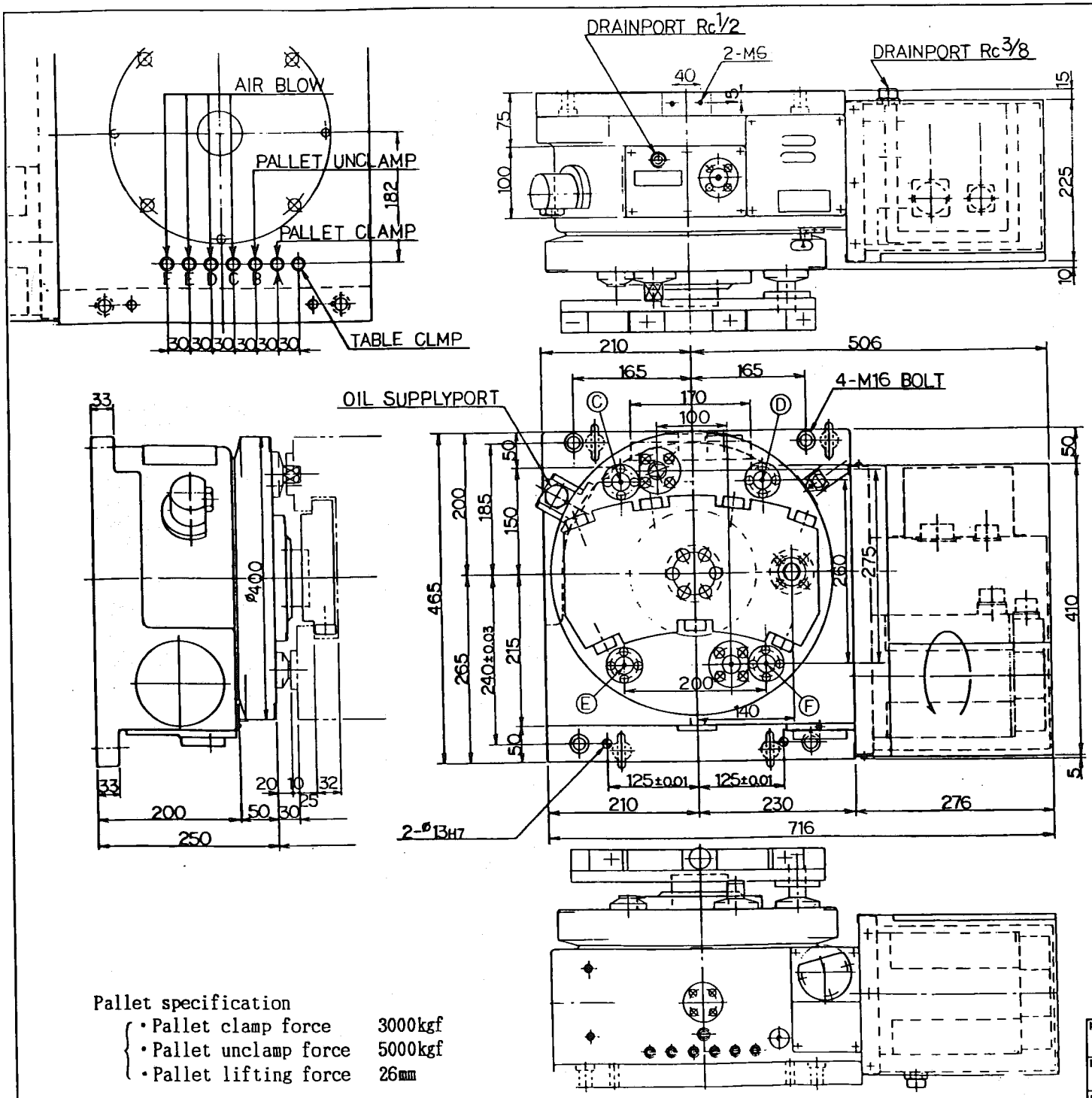

SPECIFICATION

Diameter of table	ϕ 400 mm
Servo motor	MELDAS HC202-S
Total reduction ratio	1/45
Rotation speed	33.3 rpm
Indexing accuracy	20sec
Clamping system	HYDRAULIC
Clamping torque 50kg/cm²	210 Kgf.m
Inertia at motor shaft	0.046Kg.cm.sec²
Max. work inertia	122.4Kg.cm.sec²
Min. increment	0.001°
Max. load HOR.	600 Kg
Max. cutting thrust	119 Kgf.m
Net weight	270 kg

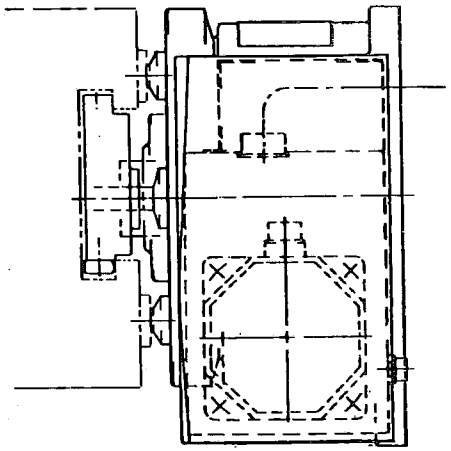

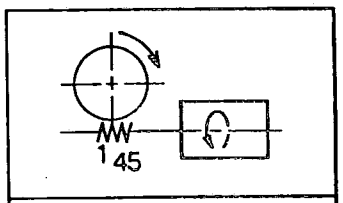

GEAR SYSTEM CHART

Pallet specification

- Pallet clamp force 3000kgf
- Pallet unclamp force 5000kgf
- Pallet lifting force 26mm

KIND	TITLE	CUSTOMER		
MACHINE MODEL	CODE NO. CNC400HMA-APC-2	DESIGNED	CHECKED	APPROVED
SCALE	NIKKEN KOSAKUSHO WORKS, LTD.	DRWG NO.	TCA-59025	
DATE '99-3-12				

POWER AND SIGNAL CABLE

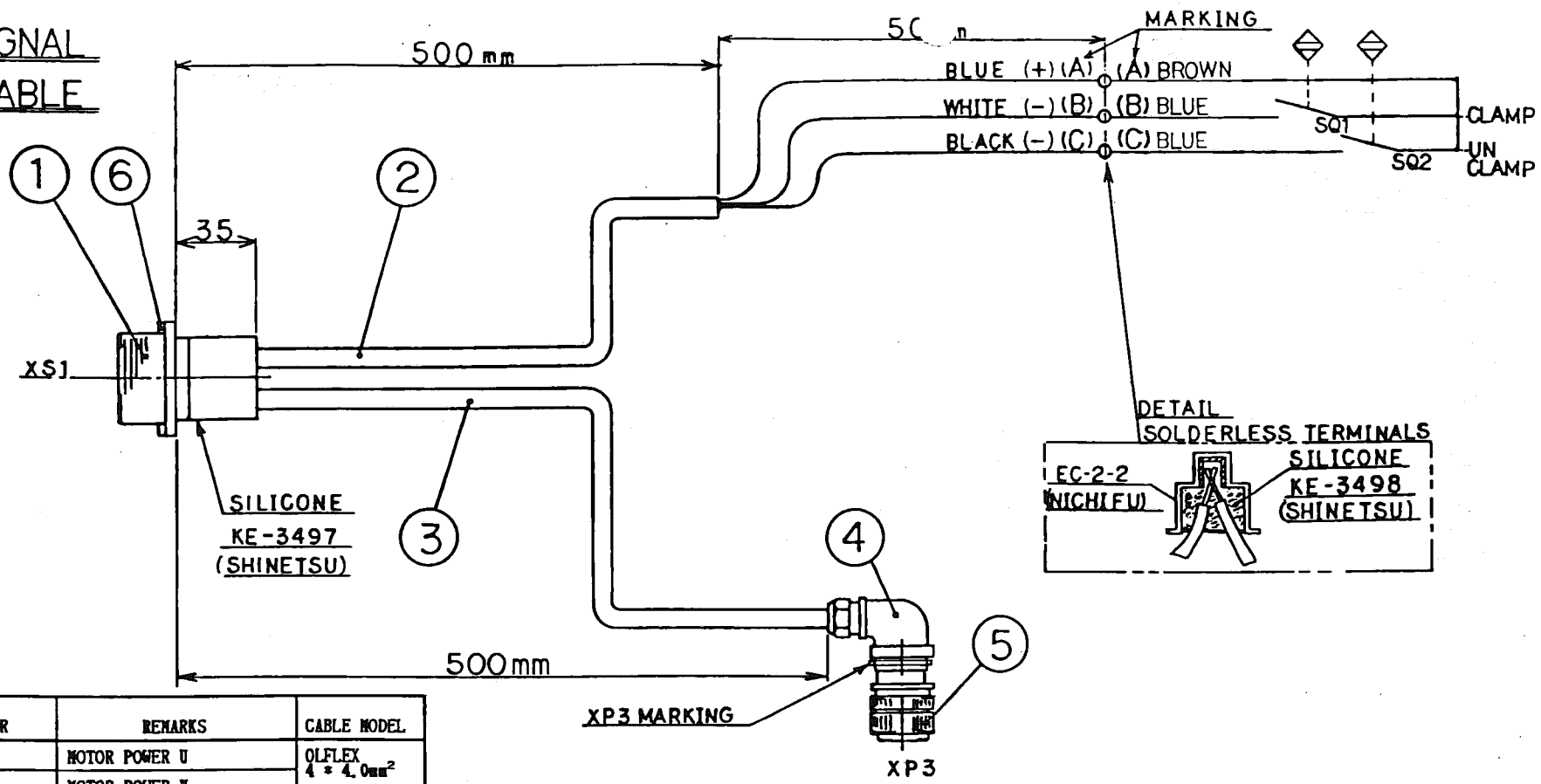

XS1 PIN #	XP3 PIN #	COLOR	REMARKS	CABLE MODEL
J	A	Brown	MOTOR POWER U	OLFLEX 4 × 4.0mm² #0010101
K	B	Blue	MOTOR POWER V	
L	C	Black	MOTOR POWER W	
M	D	Green/Yellow	EARTH	
A	-	Blue	INPUT SIGNAL COM.	OLFLEX 10 × 0.75mm² #0010029
B	-	White	CLAMP CONFIRMATION	
C	-	Black	UNCLAMP CONFIRMATION	
W	-		JUMPER (4AXIS)	
X	-			

SIMBOL	ITEM	MODEL	PCS	REMARKS	MAKER
SQ1	Proximity SW	FL7M-3J6HD	1	DC10V～30V	YAMATAKE
SQ2	Proximity SW	FL7M-3J6HD	1	DC10V～30V	YAMATAKE

No.	ITEM	MODEL No.	PCS	MAKER
①	Receptacle	JL04V-2A28-11PE	1	J.A.E
②	Cable	#0010029	1	LAPP
③	Cable	#0010101	1	LAPP
④	Connector	YOL24-12～14	1	DAIWA
⑤	Plug	JL04V-6A24-10SE	1	J.A.E
⑥	Packing	J9289-28	1	J.A.E

KIND MELDAS HC202S-	TITLE	CUSTOMER	
MACHINE MODEL CNC400HMA	CABLE INSIDE MOTORCOVER	DESIGNED	CHECKED / APPROVED
SCALE	NIKKEN KOSAKUSHO WORKS, LTD.	DRWG NO.	TCE-59013
DATE '99-1-21			

DECなし、直接SW/ヤマタケ使用

3

FEEDBACK CABLE

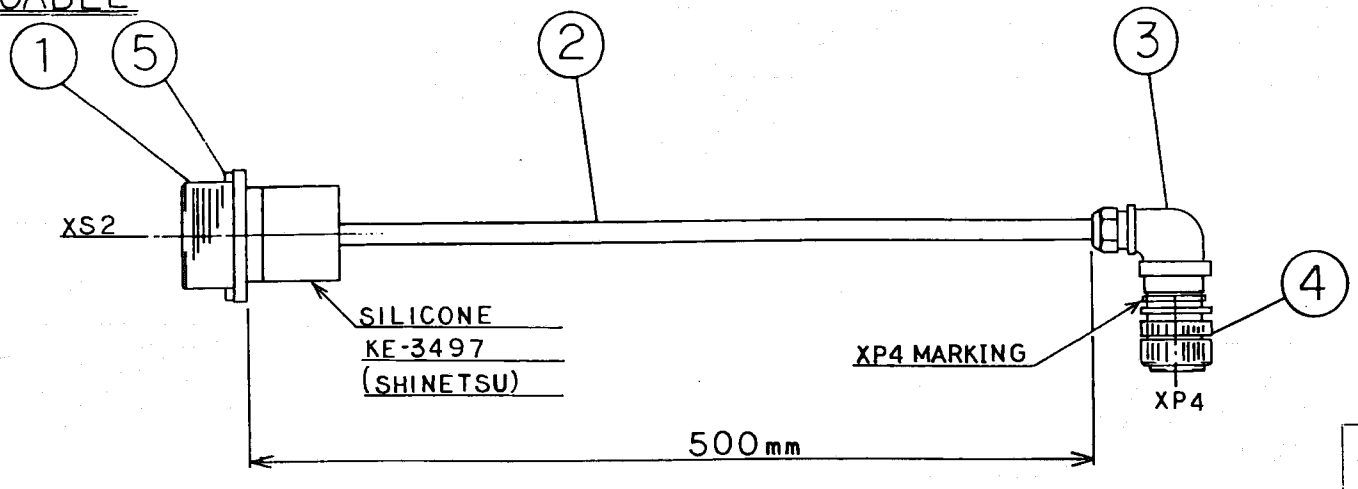

XS2 PIN #	XP4 PIN #	COLOR	REMARK OHA25K	REMARK OHE25K OSE-104	CABLE MODEL
E	E	Light Blue	BAT	———	12P * 0.3mm² MAKER: TAIYO DENSEN
S	S	Light Green-White Grey-White Light Blue-White Pink-White Violet-White	+5V	+5V	
R	R	Violet, Light green Grey, Pink	GND	GND	
A	A	Orange	A	A	
B	B	Orange-White	*A	*A	
C	C	Black	B	B	
D	D	Black-White	*B	*B	
F	F	Red	Z	Z	
G	G	Red-White	*Z	*Z	
H	H	Blue	SD	U	
J	J	Blue-White	*SD	*U	
K	K	Green	RQ	V	
L	L	Green-White	*RQ	*V	
M	M	Yellow	———	W	
U	U	Yellow-White	———	*W	
T	T	Brown	THERMAL	THERMAL	
V	V	Brown-White	GND	GND	
N	N		SHIELD	SHIELD	

No.	ITEM	MODEL	PCE	MAKER
①	Receptacle	JL04-2E22-14P	1	J.A.E
②	Cable	HKAVV-SBK	1	TAIYO DENSEN
③	Connector	YOL22-12~14	1	DAIWA
④	Plug	JA06A-22-14S-J1	1	J.A.E
⑤	Packing	J9289-22	1	J.A.E

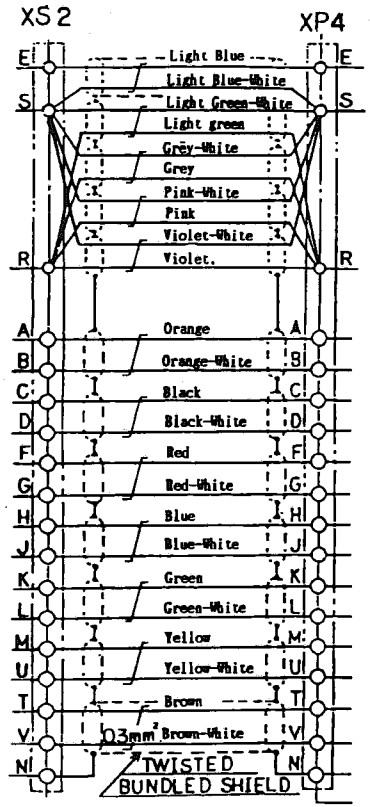

MELDAS HC202S-A42 HC202S-E51 40NC-S 40 E30 HA80NC-S

KIND	TITLE	CUSTOMER	
MACHINE MODEL HA100NC-S	CODE NO. CABLE INSIDE MOTOR COVER	DESIGNED	CHECKED / APPROVED
SCALE	NIKKEN KOSAKUSHO WORKS, LTD.	DIR-NAME	
DATE 95.7.31		DRWG NO. TCE-91785	

3. Preparation for operation

When operating the CNC circular table after purchasing, the next preparations and trial run etc. are necessary.

1) Unpacking, transportation and installation
2) Pouring lubricating oil
3) Supply of hydraulic pressure for clamp and air vent
4) Electrical connection
5) Trial run

3 − 1. Unpacking, transportation and installation

① Unpacking and transportation

Take careful attention for transportation after unpacking.

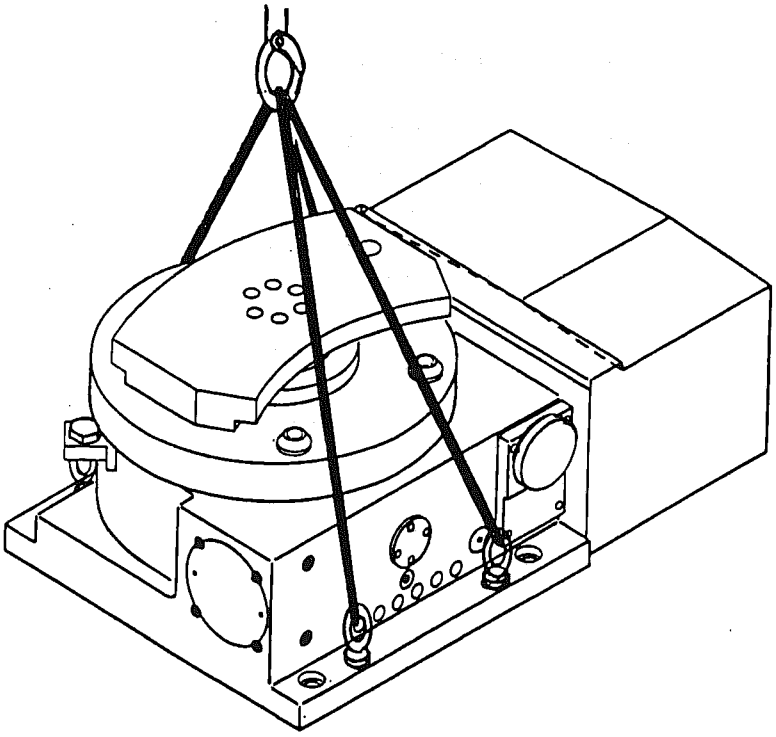

Fig. 1

② Removal of rust-preventive oil

Carefully wipe off rust-preventive oil which has been applied on the entire surfaces of table before shipping. Avoid use of benzine and gasoline which may cause rust.

③ Installation

After installing the table, securely tighten it according to the method and installation holes as previously discussed.

3 – 2. Filling lubricating oil

Since the oil reservoir is of a totally enclosed type, mingling-in of coolant and leakage of lubricating oil will scarecely occur.

But, be sure to examine oil, inspect the oil pot every day and supply appropriate oil if necessary.

Incidentally, Super Multi 100 has been fully supplied from these ports before shipping so that no oil is required to be supplied at the initial state.

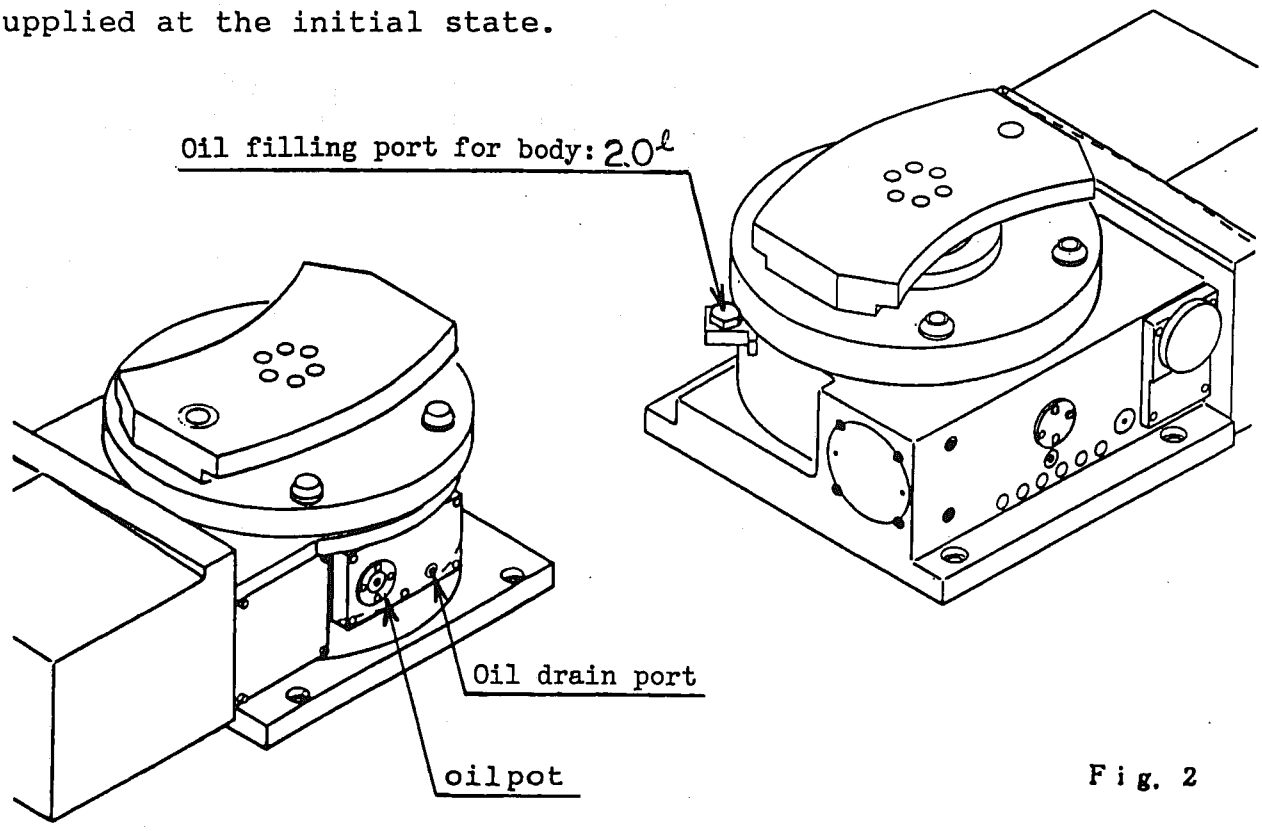

Fig. 2

List of recommended oil

Oil maker	Brand name
Idemitsu	Super Multi 100
Kyodo Sekiyu	Leductus 68 to 100
Cosmo Oil	Bio Gear SP-68 to 100
Nippon Sekiyu	Bon Knock SP-68 to 100
Mitsubishi Sekiyu	Diamond Gear Lub SP-100
MOBIL	Mobil Gear 626
ESSO	Spaltan EP-68
SHELL	Omara Oil 68 to 100

3 − 3. Supply of hydraulic pressure for clamp

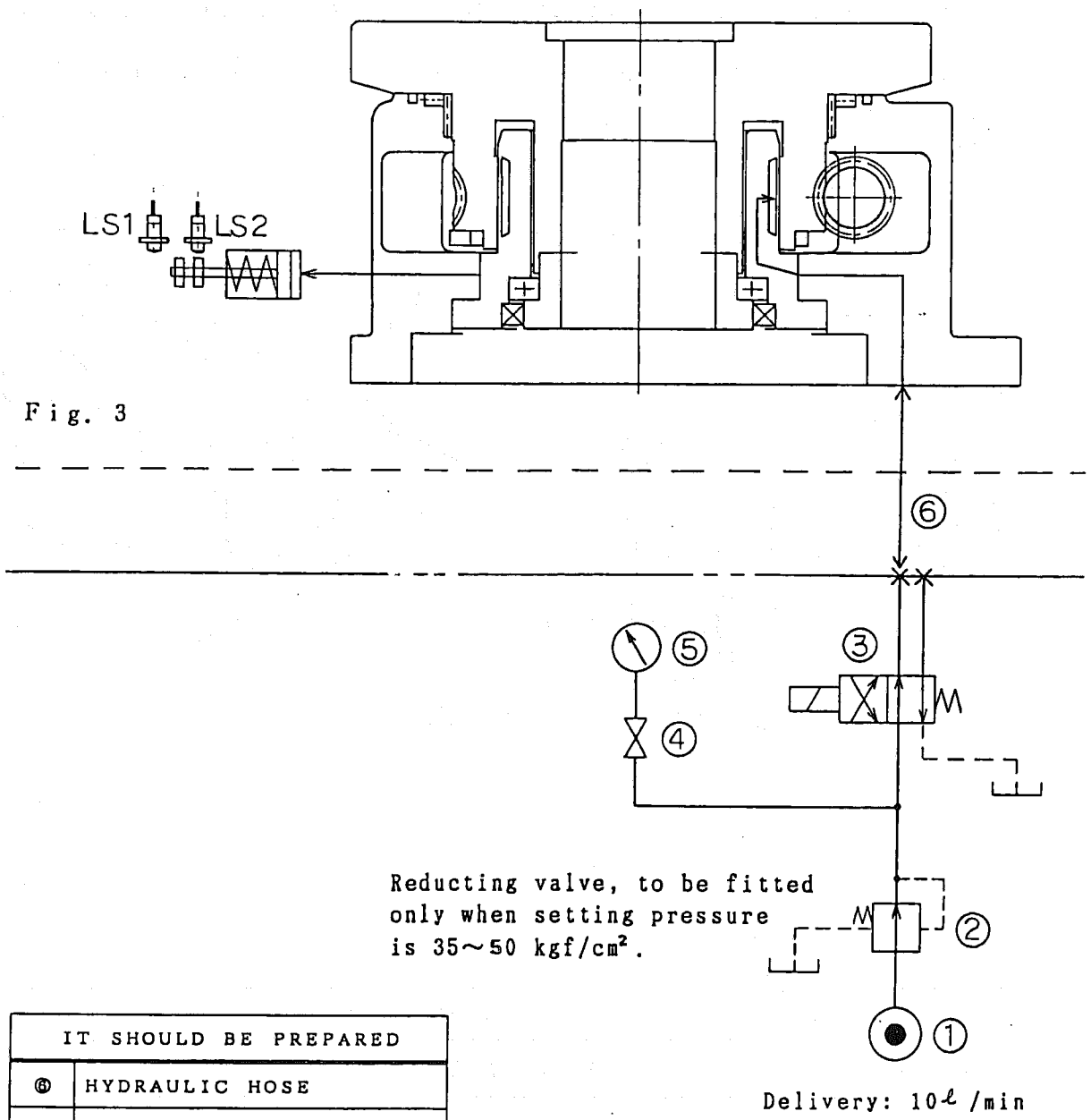

Fig. 3

IT SHOULD BE PREPARED	
⑥	HYDRAULIC HOSE
⑤	PRESSURE GAUGE
④	GAUGECOCK
③	SOLENOID VALVE
②	REDUCING VALVE
①	PUMP
No.	ITEM

3 - 4 Electrical connection

For electrical connection with NC machine, refer to the attached electric connection diagram. Starting the table with the brake clamped would cause a breakage of table !

Viewing from the NC machine side, the motor and the pulse coder have been wired inside the motor cover so as to become the standard connection, unless otherwise specified (excluding AC servo). When inversely connecting the motor and pulse coder, inversely connect the wiring of NC side machine or set the parameter to the inverse connection.

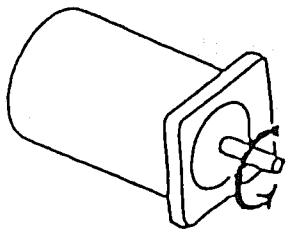

Motor and tacho-generator

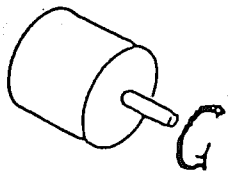

Pulse coder

3 - 5 Trial run

1) Connect hydraulic pressure to the table to make sure it is supplied correctly.

2) Do not install a work piece on the table to apply no load thereon.

3) Give the table brake clamp (M10, M68 etc.) and brake unclamp (M11, M69 etc.) signals alternatively and repeatedly from NC unit to make sure the brake functions normally.

   When driven by the NIKKEN 8800AX, make sure by using the G10 (unclamp instruction) and G11 (clamp instruction).

   N000 G10 G13 (unclamp, single operation mode)

   N001 J000 G11 (jump to N000 after clamp)

4) For the trial run of the rotating axis, carry out the break-in by making the axis rotate in both normal & reverse directions for about twice at a low feeding speed (about F360) to make sure of smooth rotation. Then, increase the rotation speed gradually.

4. Mechanism and preservative adjustment of major functioning part

4 – 1. Mechanism and arrangement of major functioning part

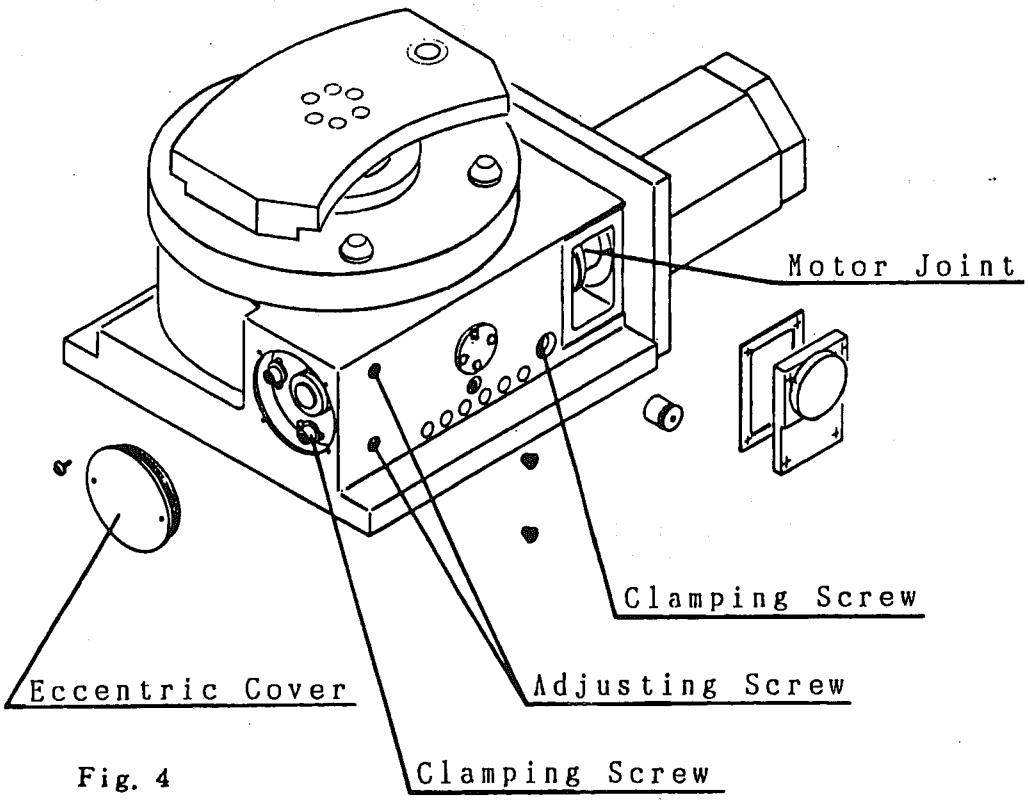

Fig. 4

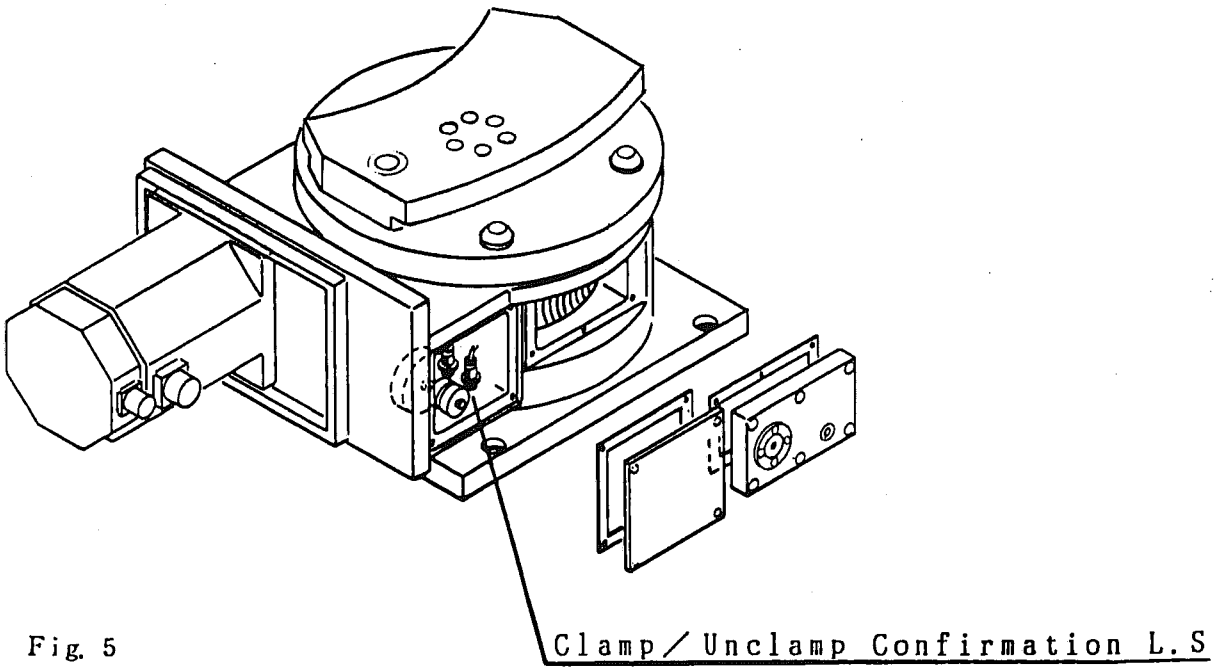

Fig. 5

4-2 Adjustment of backlash

Ensuring the backlash

The worm screw rotates in the totally-enclosed oil bath and the deceleration mechanism is composed of a combination of the special ion-nitrided worm gearand the tungusten carbide worm screw, so that it is not necessary to adjust the backlash until four to five years have elapsed after the rotary is put in service.
However, it necessary, the backlash can be adjusted easily according to the following procedures.

1) Unclamping the brake.

2) Confirming the backlash

Read a deflection of the dial guage at each taper pin on the table face plate by manoeuvring the face plate clockwise and anti-clockwise by your hands.
A backlash within 5 to 15 microns is intial amount has been set at factory and the adjustment is required in the event when 50 microns or more is observed.
The measurement is to be done at eight spots of every 45 deg. of the table

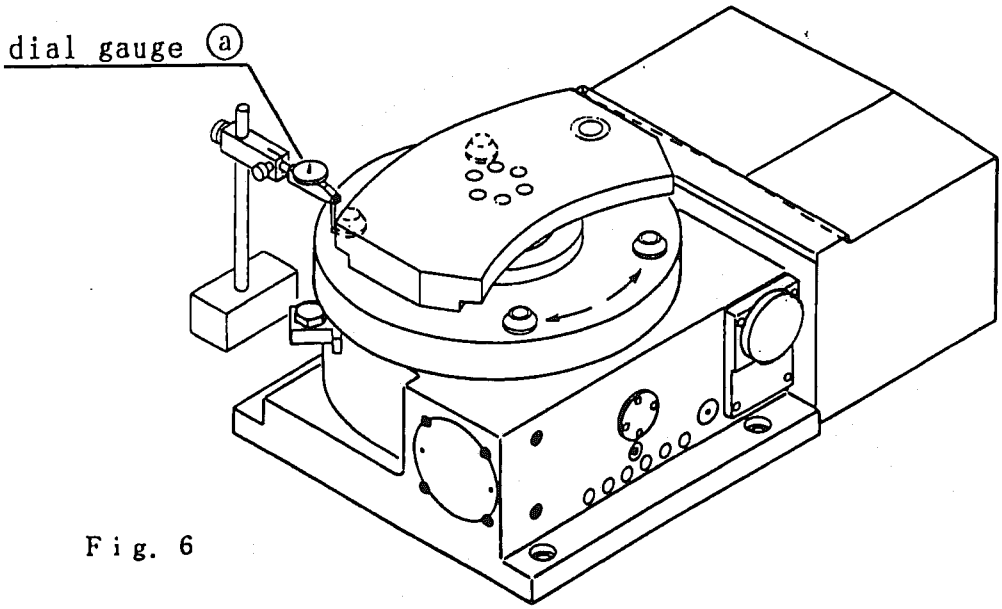

Fig. 6

3) Adjustment of backlash of worm gear

① Pull out the oil from the drain.

② Loosen four fastening screws for the eccentric cover "b" and remove the cover.

③ Slightly loosen four eccentric shaft clamping screws "c" .

④ Pull out (Fig7- "d") the claw plug.

⑤ Lossen, two or three turns, the screw "e" fastening an inner part of the claw plug. Slightly tap its head, and the inner part clamping piece "f" will be loosened and the eccentric shaft will be released. Thus, the clamped state is made free for permitting adjustment.

⑥

Fig. 7

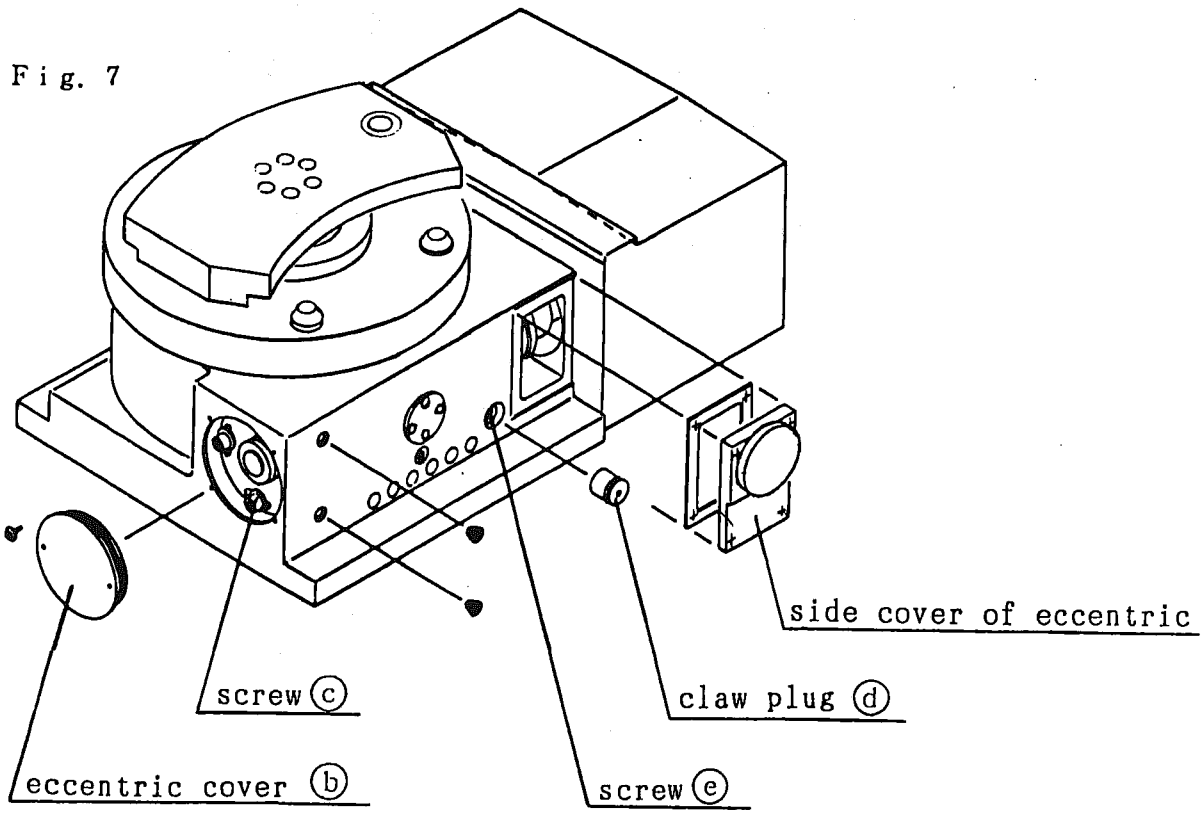

⑦ Reset the dial gauge "a" as shown Fig6, loosen the backlash adjusting screw "h" and tighten the screw "i" clockwise, then the eccentric shaft will turn to bring the backlash between worm wheel and worm shaft near to zero.

⑧ Adjust the backlash from 10 to 20 microns by using the screws "h" & "i" watching a deflection of the dial gauge " a" while setting the bolt in the hole for jig installation on the surface of the table and maneuvering the bolt clockwise and anticlockwise by hand.

⑨ After completion of the adjustment, tighten the screws "c" and "d" again.

⑩ Measure the backlash again to ensure that the backlash can be adjusted from 5 to 10 microns.

⑪ After ensuring everything, reassemble the cover and fill lubricating oil.

Fig. 8

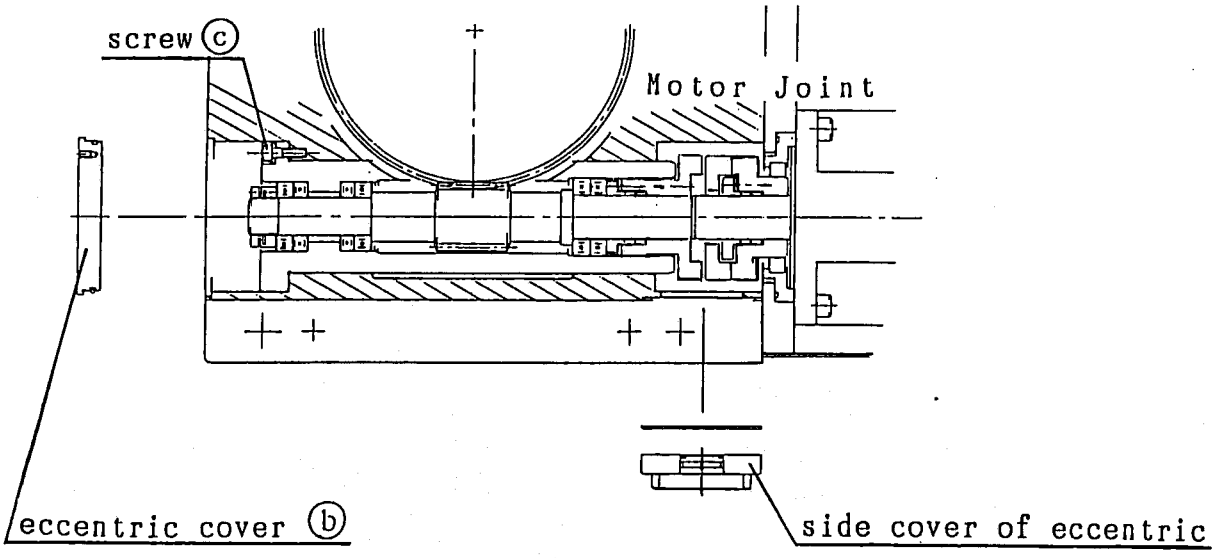

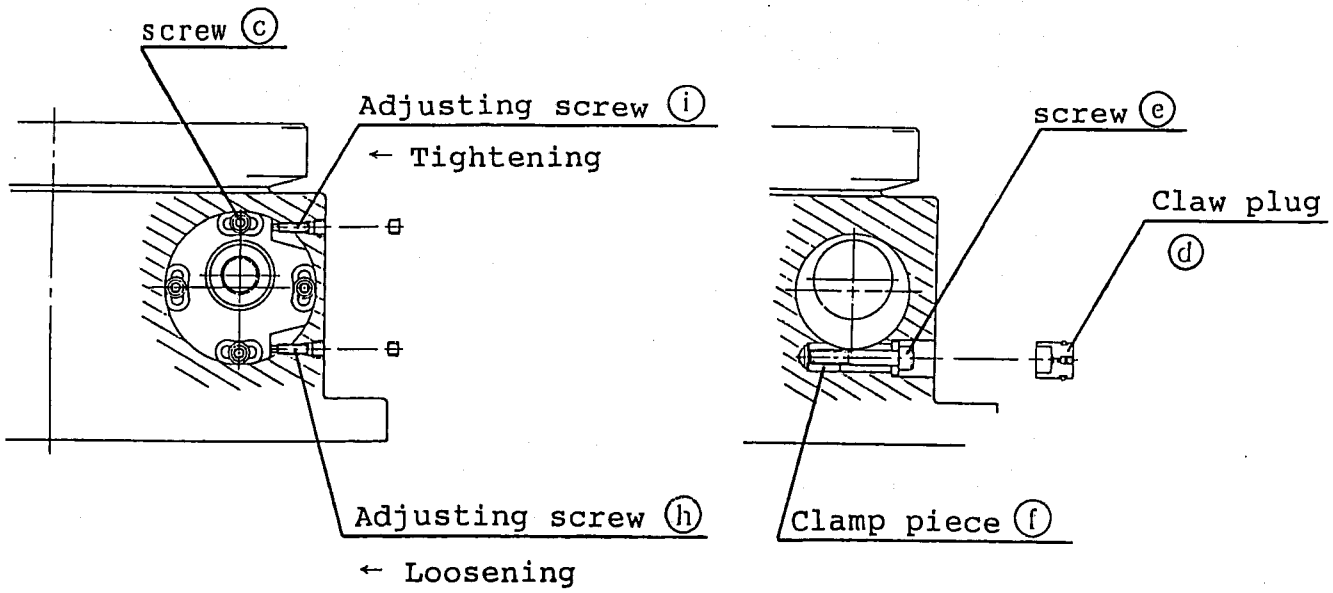

Fig. 9

4-3 Brake and ensuring mechanism

1) Hydraulic pressure is supplied to the expansion ring for clamp by the clamp command. Since the expansion ring unformly tighten the internal surface of the table, a strong and precise clamping state can be ensured. In this instance, the hydraulic pressure is simultaneously supplied to the brake ensuring part too, so that the piston is actuated to operate the clamp ensuring limit switch.

2) When unclamp hydraulic pressure is supplied by the unclamp command, the tightening of expansion ring is released to bring about the unclamping state. At the same time, this pressure is supplied to the brake ensuring part too. The piston is returned to its original position to operate the unclamp ensuring switch.

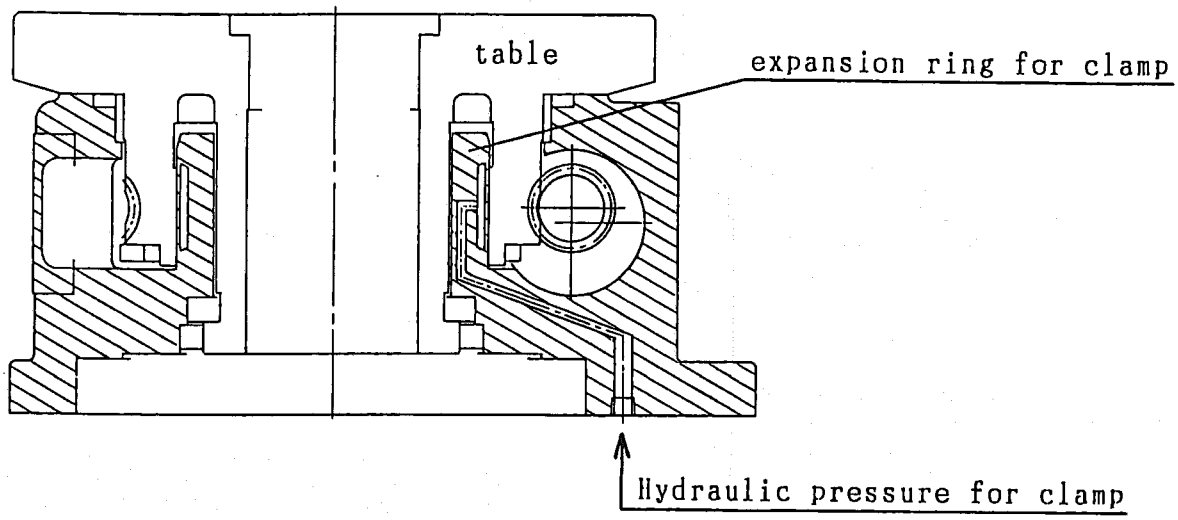

Fig. 10

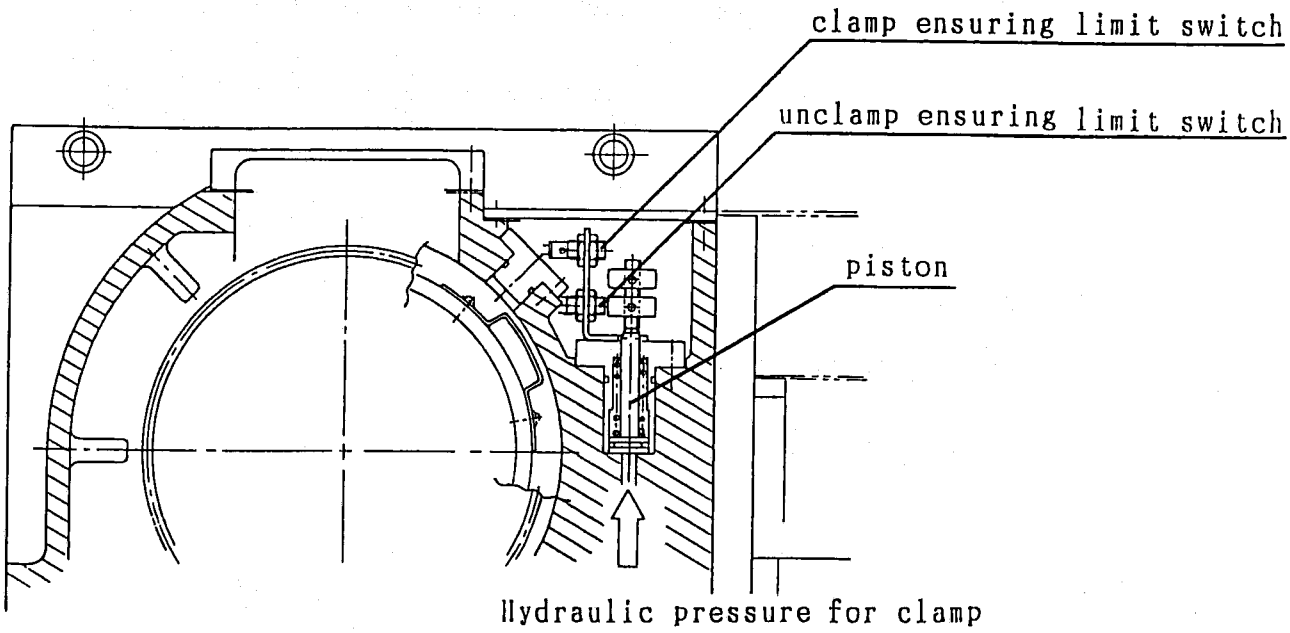

Fig. 11

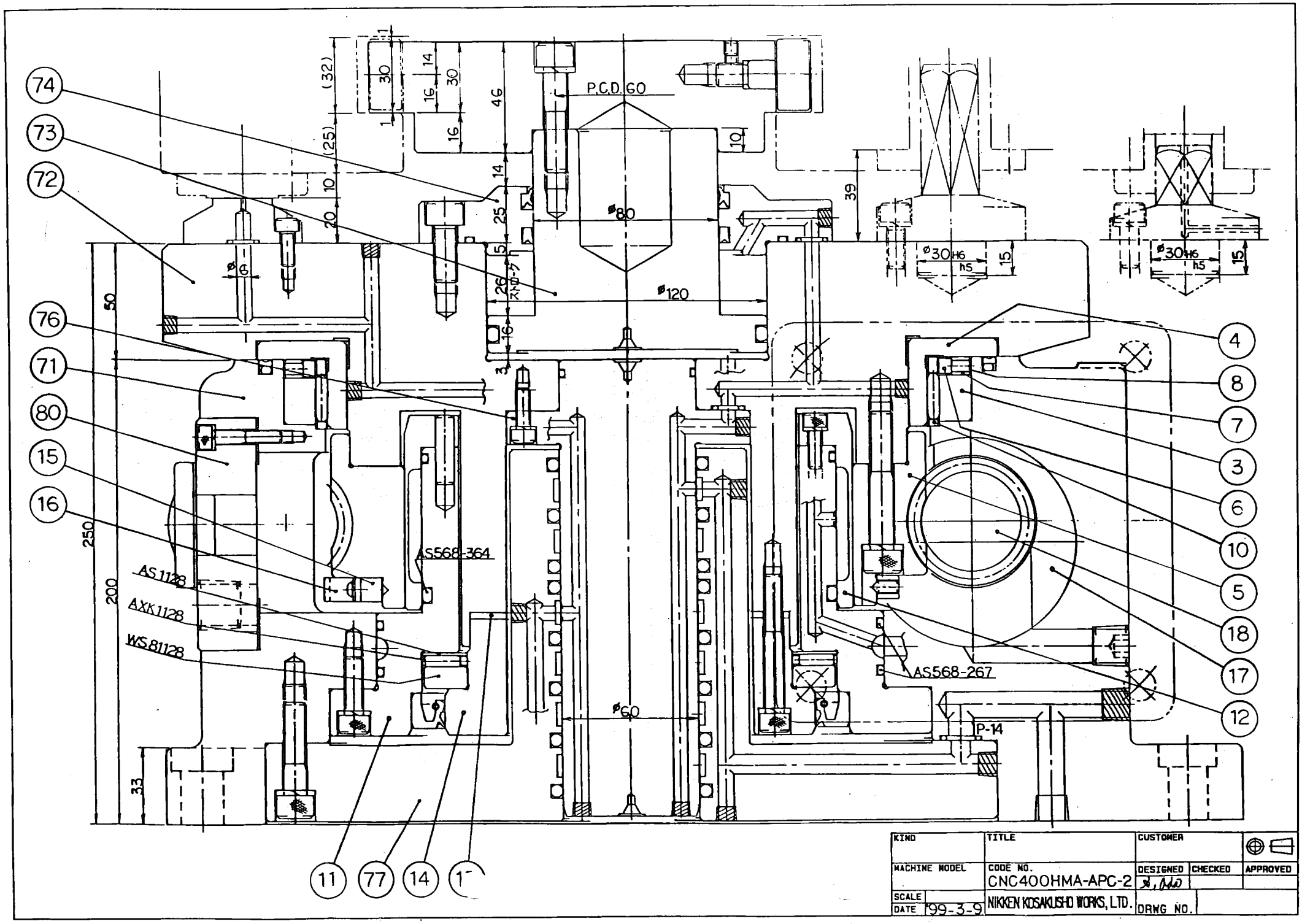

KIND	TITLE	CUSTOMER		
MACHINE MODEL	CODE NO. CNC400HMA-APC-2	DESIGNED	CHECKED	APPROVED
SCALE	NIKKEN KOSAKUSHO WORKS, LTD.	DRWG NO.		
DATE 99-3-9				

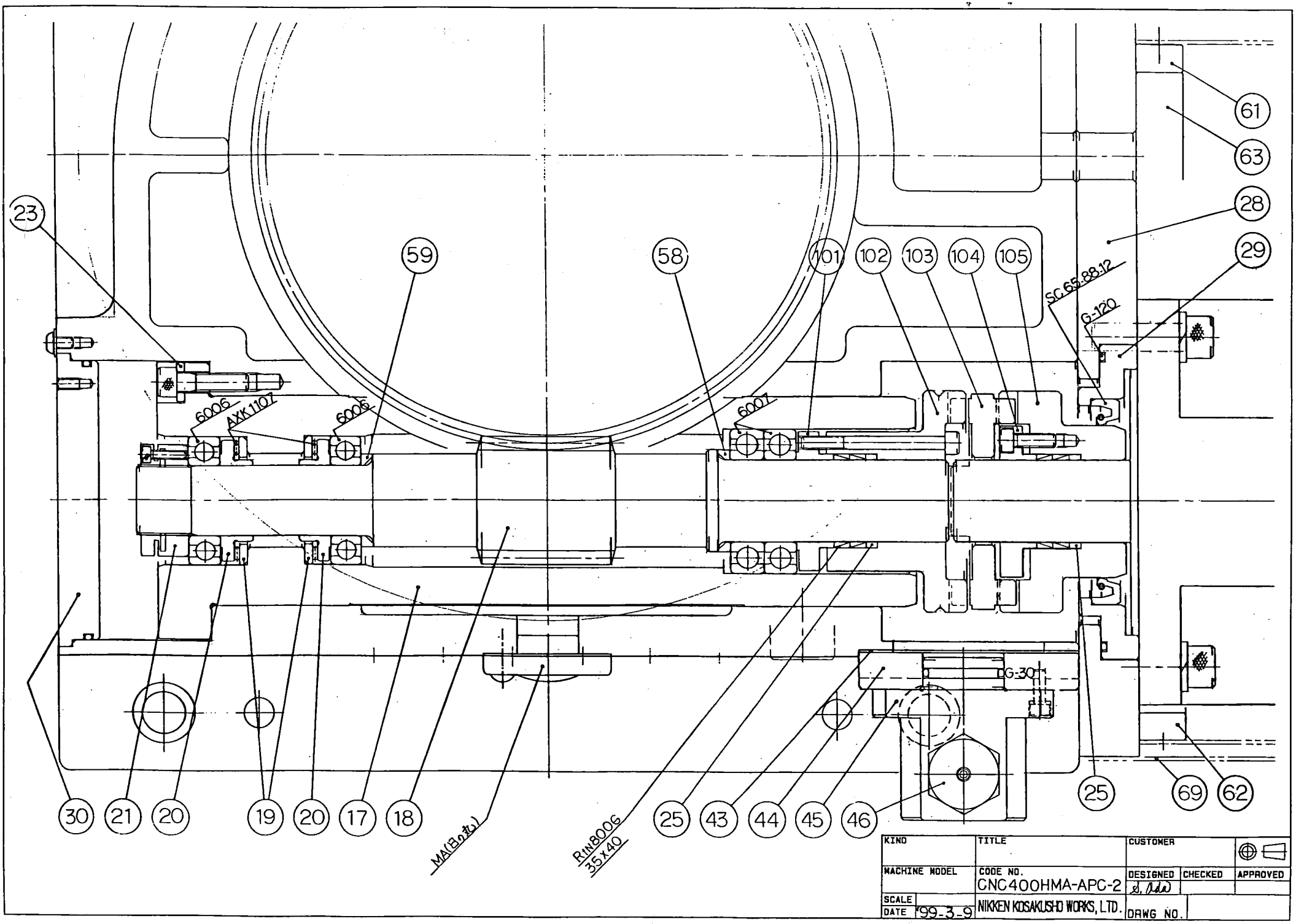
23
59
58
101
102
103
104
105
61
63
28
29
SC65.88.12
G-120
6006
AXK1107
6006
6007
G-30
30
21
20
19
20
17
18
MA(ヨロヒ)
RIN8006
35X40
25
43
44
45
46
25
69
62
KIND
TITLE
CUSTOMER
MACHINE MODEL
CODE NO.
CNC400HMA-APC-2
DESIGNED
CHECKED
APPROVED
SCALE
DATE '99-3-9
NIKKEN KOSAKUSHO WORKS, LTD.
DRWG NO.

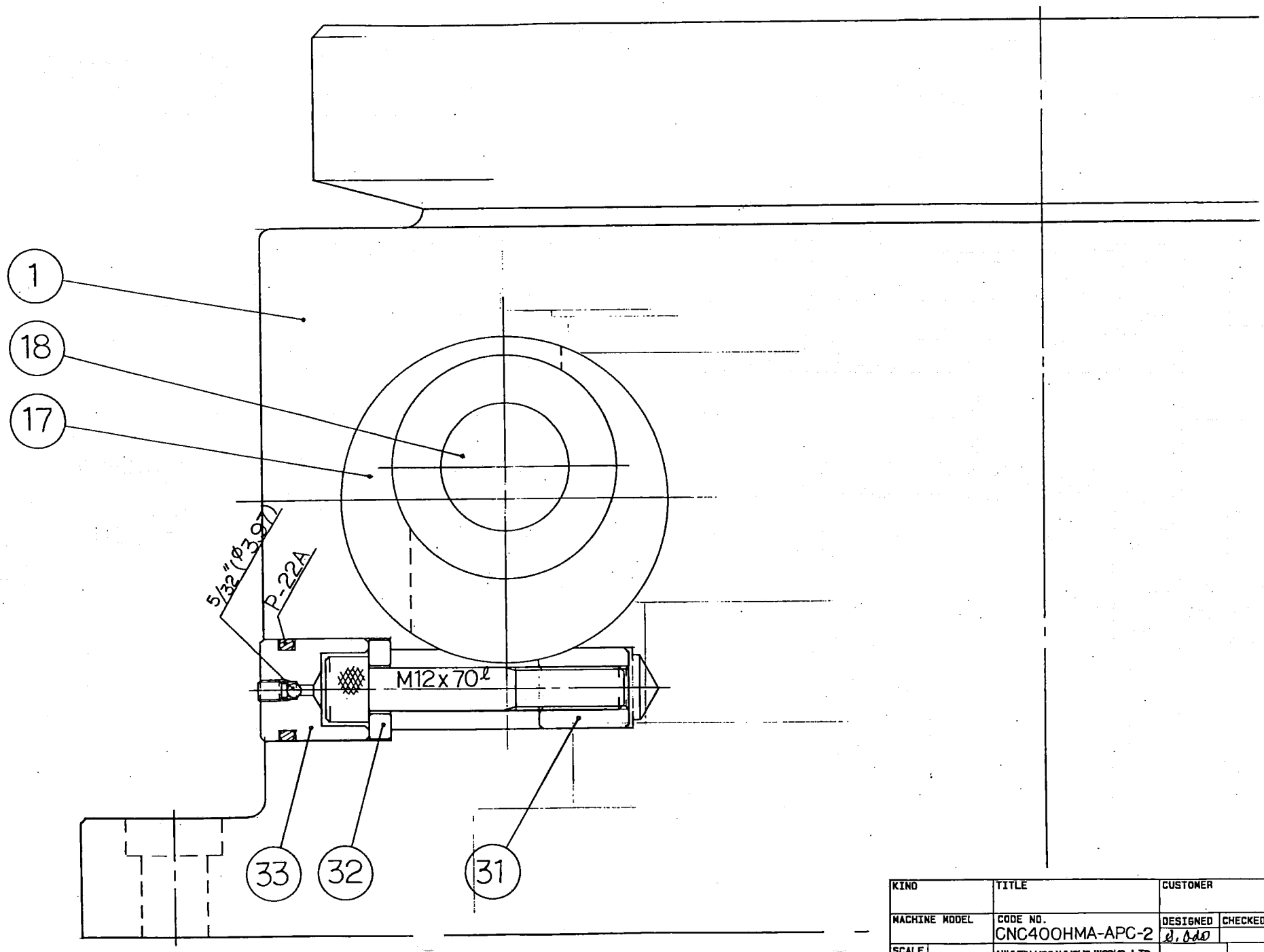

KIND	TITLE	CUSTOMER		
MACHINE MODEL	CODE NO. CNC400HMA-APC-2	DESIGNED S. Oda	CHECKED	APPROVED
SCALE	NIKKEN KOSAKUSHO WORKS, LTD.	DRWG NO.		
DATE '99-3-9				

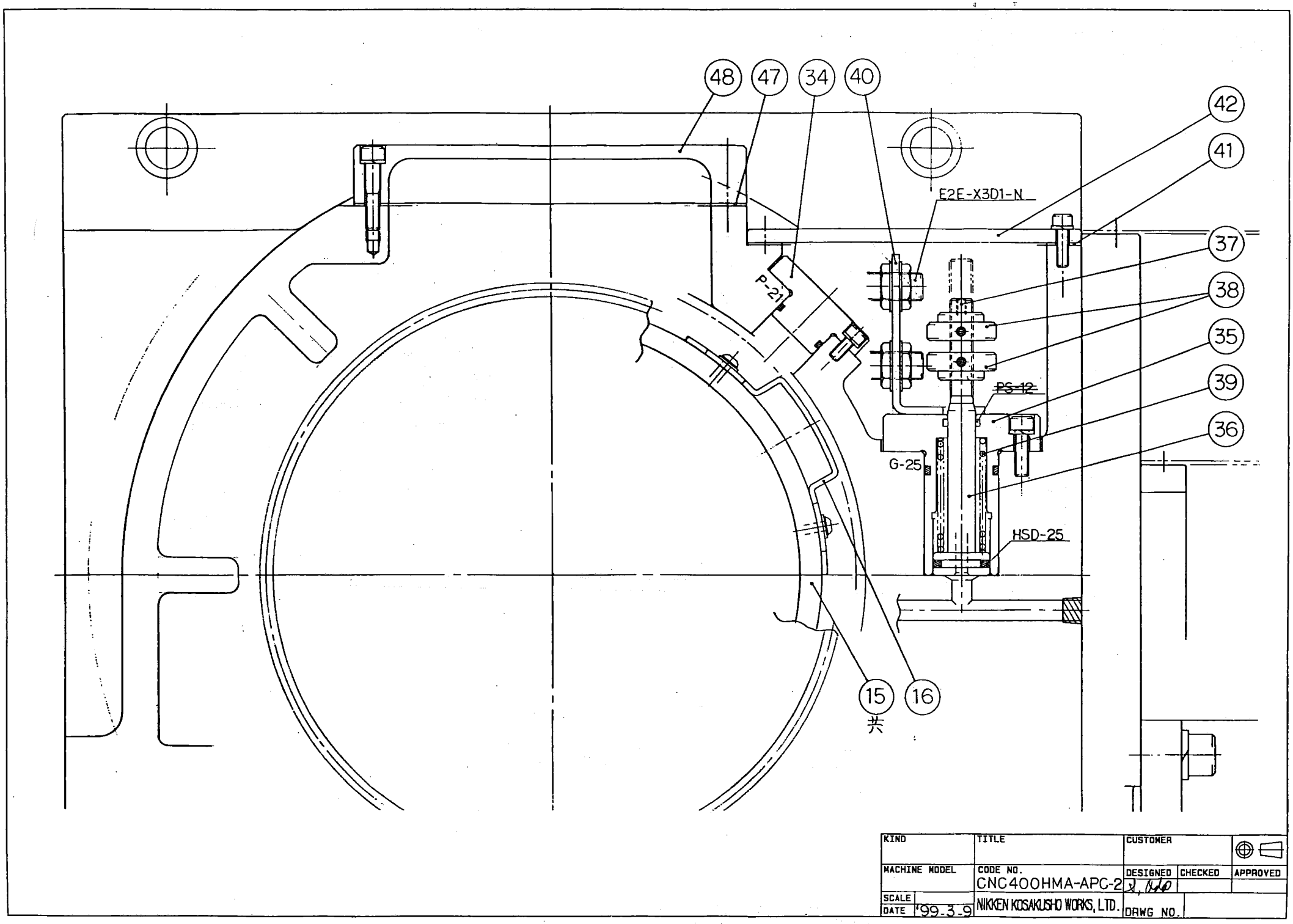
48
47
34
40
42
41
E2E-X3D1-N
37
38
35
39
36
P-21
PS-12
G-25
HSD-25
15
16
共
KIND
TITLE
CUSTOMER
MACHINE MODEL
CODE NO.
CNC400HMA-APC-2
DESIGNED
CHECKED
APPROVED
SCALE
DATE
'99-3-9
NIKKEN KOSAKUSHO WORKS, LTD.
DRWG NO.

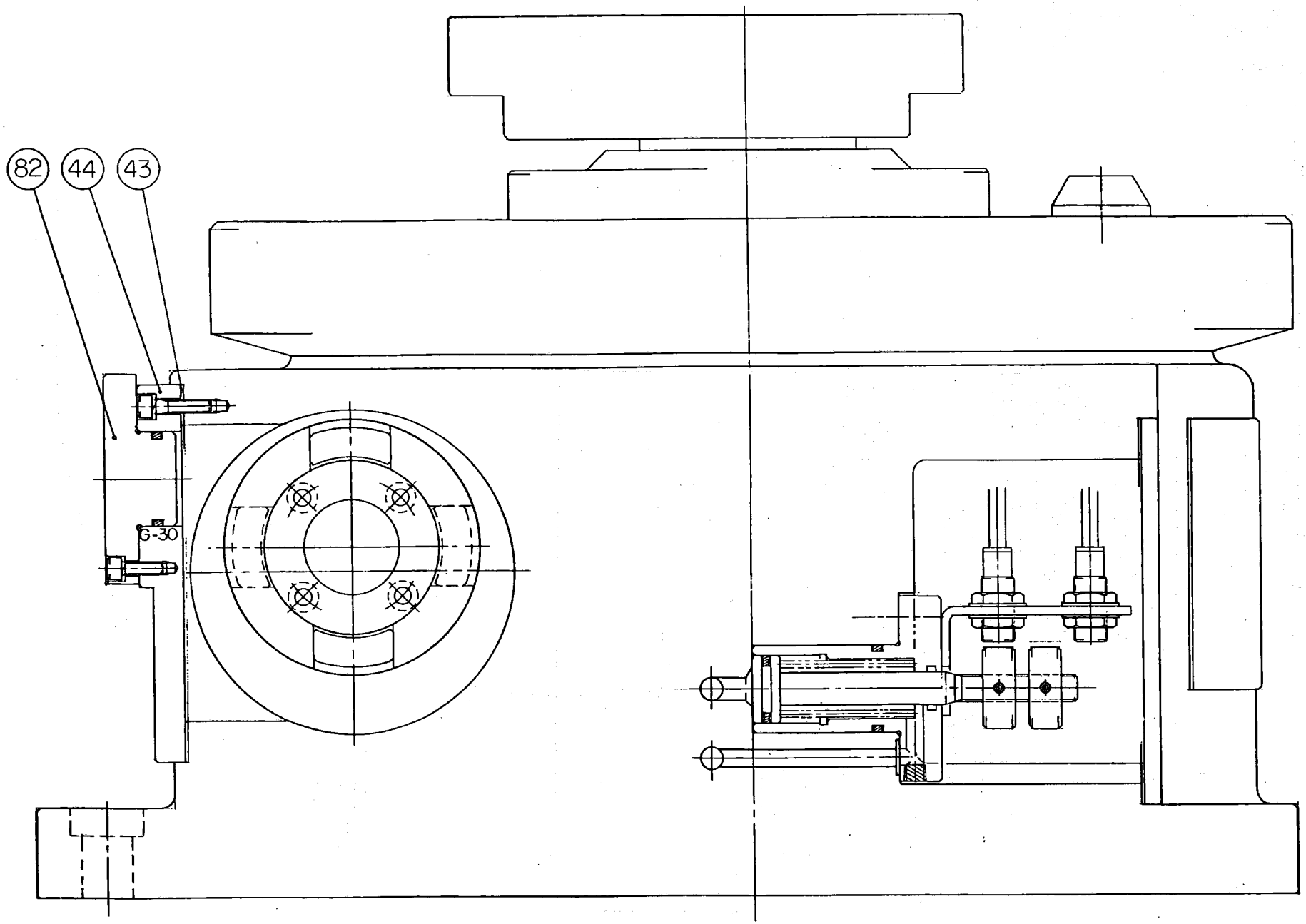

KIND	TITLE	CUSTOMER		
MACHINE MODEL	CODE NO. CNC400HMA-APC-2	DESIGNED S. Oda	CHECKED	APPROVED
SCALE	NIKKEN KOSAKUSHO WORKS, LTD.	DRWG NO.		
DATE '99-3-9				

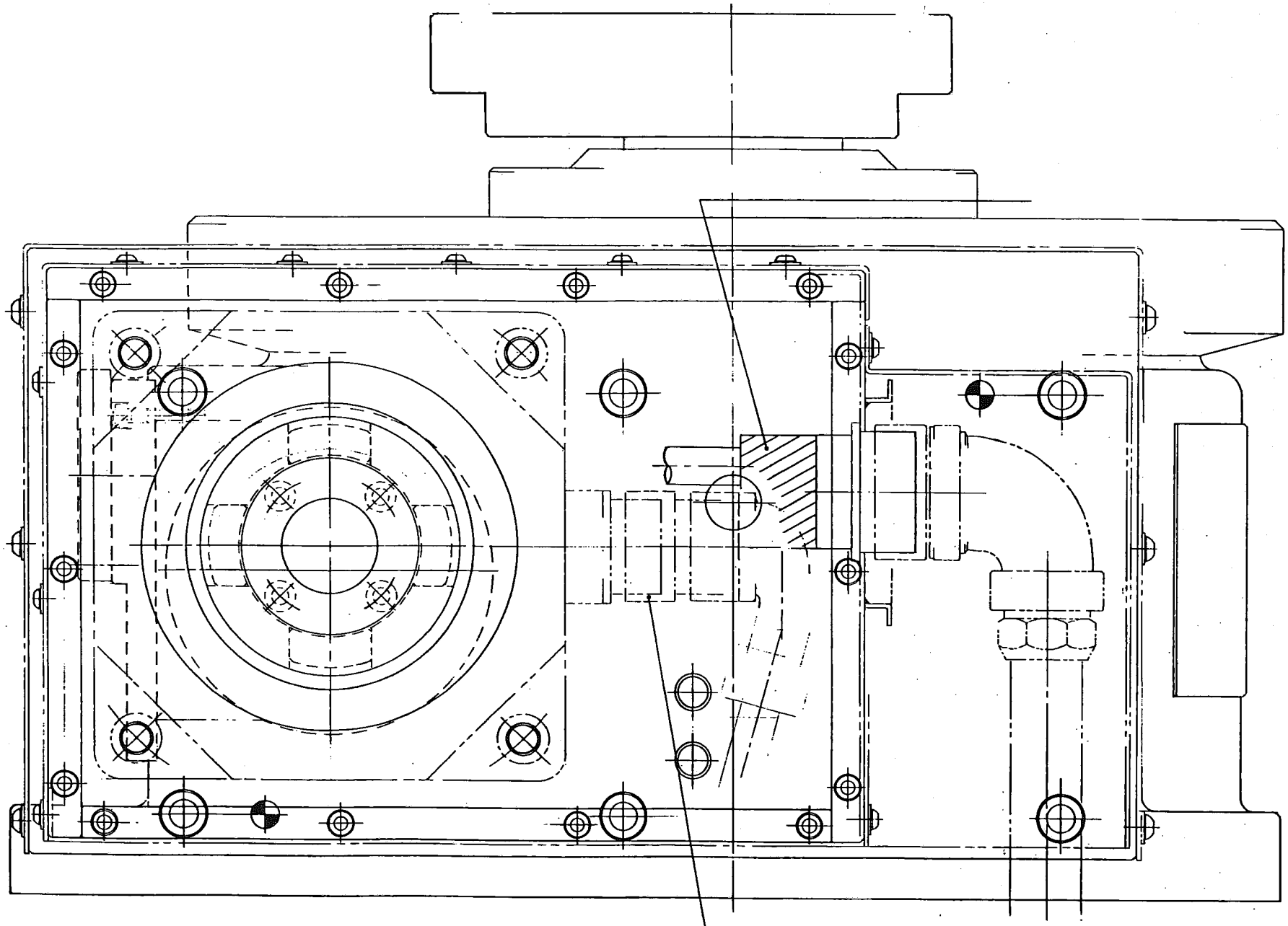

J3 { JA06A-22-22S-J1 (JAE)
YOL-22-14 (DAIWA)

J4 { JA06A-20-29S-J1 (JAE)
YOL-20-12 (DAIWA)

KIND	TITLE	CUSTOMER		
MACHINE MODEL	CODE NO. CNC400HMA-APC-2	DESIGNED	CHECKED	APPROVED
SCALE				
DATE '99-3-9	NIKKEN KOSAKUSHO WORKS, LTD.	DRWG NO.		

CNC ROTARY TABLE

No.

CNC400HMA-APC-2

No.	PARTS No.	PARTS NAME	MODEL & TYPE	Q'ty	MAKER
3	EADCN322R003	OUTER LATHE		1	NIKKEN
4	EADCN322R004	INNER LATHE		1	NIKKEN
5	EADCN401H005	DOUBLE-START WORM WHEEL		1	NIKKEN
6	EADCN322R006	RETAINER FOR TUBULAR ROLLER		60	NIKKEN
7	EADNH301R054	TUBULAR ROLLER		1	NIKKEN
8	EADCN322R008	COUNTER PLATE ROLLER		1	NIKKEN
9	EADCN322R009	SETTING PIECE		1	NIKKEN
10	EADCN322R010	RADIAL RETAINER		1	NIKKEN
11	EADCN403R011	CENTER FLANGE		1	NIKKEN
12	EADCN403R012	CLAMP RING		1	NIKKEN
13	EADCN401H013	SETTEING RING		1	NIKKEN
14	EADCN401H014	COUNTER BEARING		1	NIKKEN
15	EADAX401R015	RING FOR SETTING DOG		1	NIKKEN
16	EADCN401H016	MZR DOG		1	NIKKEN
17	EADCN322L014	ECCENTRIC HOUSING		1	NIKKEN
18	EADCN401H018C	DOUBLE-START WORM SHAFT		1	NIKKEN
19	EADCN322R016	THRUST WASHER		2	NIKKEN
20	EADCN322R017	THRUST COLLAR		2	NIKKEN
21	EADCN322R018	NUT		1	NIKKEN
23	EADCN322R035	WASHER FOR ECCEN-CLAMP		4	NIKKEN
25	EADCN322R023	SPACER RING		2	NIKKEN
28	EADCN401H028	SETTING PLATE FOR MOTOR		1	NIKKEN
29	EADCN322R070	SEAL RING FOR MOTER		1	NIKKEN
30	EADCN401H030	ECCEN-COVER		1	NIKKEN
31	EADAX401R053	CLAMP PIECE		1	NIKKEN
32	EADCN322R026	COLLAR		1	NIKKEN
33	EADCN322R027	PLUG		1	NIKKEN
34	EADCN401H034A	FLANGE FOR SWITCH		1	NIKKEN
35	EADCN401H035	DETECTING UNIT SYLINDER		1	NIKKEN
36	EADCN401H036	PISTON AXIS		1	NIKKEN

CNC ROTARY TABLE

No.

CNC400HMA-APC-2

No.	PARTS No.	PARTS NAME	MODEL & TYPE	Q'ty	MAKER
37	EADCN322R046	SCREW FOR AIR DRAW		2	NIKKEN
38	EADCN401H038	DOG FOR PROXIMITY		1	NIKKEN
39	EADCN401H039	COIL SPRING FOR BRAKE CONFIRMATION		1	NIKKEN
40	EADCN401H040	BRACKET FOR BRAKE CONFIRMATION		1	NIKKEN
41	EADCN401H041	DETECTING UNIT PACKIN		1	NIKKEN
42	EADCN401H042	DETECTING UNIT COVER		1	NIKKEN
43	EADCN401H043	PACKING FOR ECCENTRIC		1	NIKKEN
44	EADCN401H044A	COVER FOR ECCENTRIC		1	NIKKEN
46	EADCN322R057	OIL SUPPLY STOPPER		1	NIKKEN
47	EADCN401H047	PACKING FOR BODY COVER		1	NIKKEN
49	EADCN402R055	BASE LINE PLATE		1	NIKKEN
50	EADAX121R064	NAME PLATE		1	NIKKEN
58	EADCN403R026	COLLAR(A)		1	NIKKEN
59	EADCN403R027	COLLAR(B)		1	NIKKEN
61	EADCN401H061	SETTING PLATE(A) FOR INNER COVER		1	NIKKEN
62	EADCN401H062	SETTING PLATE(B) FOR INNER COVER		1	NIKKEN
63	EADCN401H063	SETTING PLATE(C) FOR INNER COVER		2	NIKKEN
64	EADCN401H064A	INNER COVER		1	NIKKEN
65	EADCN401H065	OIL FENCE		1	NIKKEN
66	EADCN401H066A	SPECIAL PLUG		1	NIKKEN
67	EADCN401H067A	INNER COVER		1	NIKKEN
68	EADCN401H068	RECEPTACLE COVER		1	NIKKEN
69	EADCN401H069A	OUTER COVER		1	NIKKEN
71	EADCN401H071	BODY		1	NIKKEN
72	EADCN401H072-2	TABLE		1	NIKKEN
73	EADCN401H073-2	PISTON		1	NIKKEN
74	EADCN401H074	FLANGE		1	NIKKEN
76	EADCN401H076	CENTER SHAFT		1	NIKKEN
77	EADCN401H077-2	JOINT SLEEVE		1	NIKKEN
80	EADCN401H080	BODY COVER		1	NIKKEN

CNC ROTARY TABLE

No.

CNC400HMA-APC-2

No.	PARTS No.	PARTS NAME	MODEL & TYPE	Q'ty	MAKER
81	EADCN401H081	OIL SUPPLY FLANGE		1	NIKKEN
82	EADCN401H082	OIL SUPPLY PORT COVER		1	NIKKEN
83	EADCN401H083	COVER		1	NIKKEN
101	EADCN401H101	FLANGE(A)		1	NIKKEN
102	EADCN401H102	COUPLING(A)		1	NIKKEN
103	EADCN401H103	COUPLING(B)		1	NIKKEN
104	EADCN401H104	FLANGE(C)		1	NIKKEN
105	EADCN401H105	COUPLING(C)		1	NIKKEN
10a		NEEDLE ROLLER	φ5*19.8L(HIGH CLASS)	60	IKO
11a		O-RING FOR AIR PLANE	AS568-261	1	MITSUBISHI CABLE
11b		O-RING FOR AIR PLANE	AS568-267	2	MITSUBISHI CABLE
11c		STEEL PLATE TRACK RING	AS1128	1	NTN
11d		THRYST NEEDLE BEARING	AXK1128	1	NTN
11e		INNER RING	WS81128	1	NTN
11f		OIL SEAL	SC160,190,15	1	NOK
11j		O-RING FOR AIR PLANE	AS568-364	1	MITSUBISHI CABLE
18a		BEARING	#6006	2	NTN
18b		BEARING	#6007	2	NTN
18c		THRUST NEEDLE BEARING	AXK1107	2	NTN
29a		O-RING	G-120	1	JIS
29b		OIL SEAL	SC65,88,12	1	NOK
30a		O-RING	G-115	1	JIS
33a		O-RING	P-22A	1	JIS
33b		STEEL BALL	5/32"	1	AKS
34c		O-RING	P-21	1	JIS
35b		O-RING	G-25	1	JIS
36a		HSD PACKING	HSD-25	1	SAKAGAMI
36b		STEEL BALL	1/8"	1	AKS
40a		PROXIMITY SWITCH	FL7M-3J6HD	2	YAMATAKE
46a		O-RING	P-20	1	JIS

CNC ROTARY TABLE

No.

CNC400HMA-APC-2

No.	PARTS No.	PARTS NAME	MODEL & TYPE	Q'ty	MAKER
51a		O-RING	P-14	6	JIS
71a		FACE SEAL	φ308 WITH O-RING	1	MITSUBISHI CABLE
71b		O-RING	P-14	6	JIS
71j		O-RING	P-10	1	JIS
73a		O-RING	P-110	1	JIS
74a		SKY PACKING	SKY-80	1	SAKAGANI
74b		SDR SCRAPER	SDR-80	1	SAKAGANI
74c		O-RING	G-130	1	JIS
74d		O-RING	P-10A	1	JIS
76b		O-RING	G-55	1	JIS
76g		O-RING	P-10A	1	JIS
77a		CAP O-RING	SOP-60	8	MITSUBISHI CABLE
80a		OIL GAUGE	MA(日の丸)	1	KOUHOU
81a		O-RING	G-30	1	JIS
81c		SEAL RING	DS-1-5	3	MITSUBISHI CABLE
82a		O-RING	G-30	1	JIS
82c		SEAL RING	DS-1-5	3	MITSUBISHI CABLE
102a		SHUPAN RING	RfN8006(35*40)	4	RINGFEDER