NIKKEN CNC ROTARY TABLE

# CNC 501 ,601

INDIVIDUAL INSTRUCTION MANUAL

FIRST EDITION

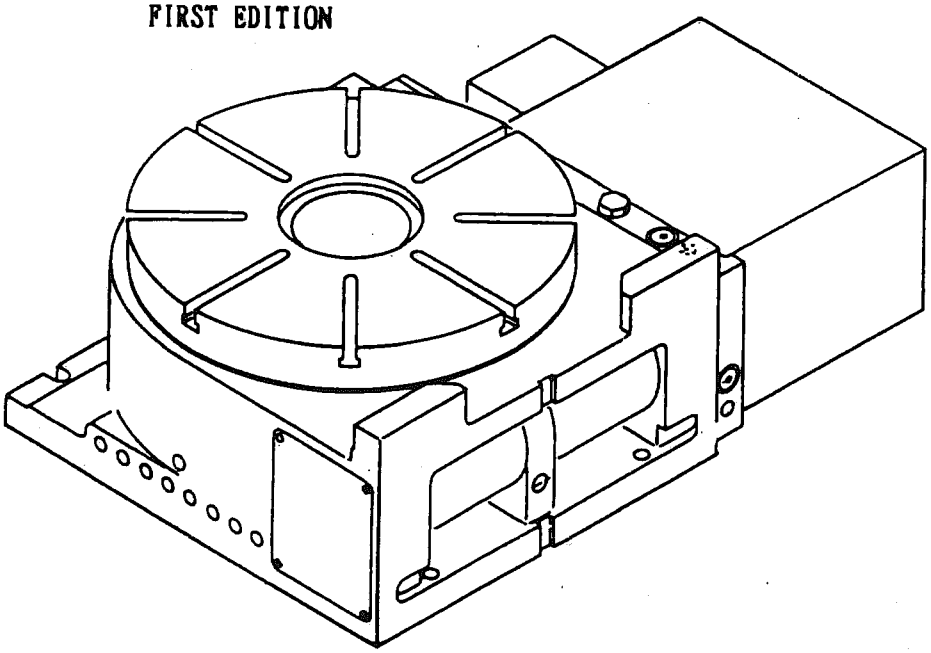


**NIKKEN KOSAKUSHO WORKS., LTD.**

5-1, 1chome,Minamishinden,Daito,Osaka, Japan

Tel:(072)869-5810 Fax:(072)869-6210

CONTENTS

1. Preface ..... 1

2. Dimensions & Specification ..... 2

3. Preparation for operation ..... 3

3-1 Unpacking, transfer and Installation ..... 3

3-2 Filling lubrication oil ..... 4

3-3 Supply of Hydraulic Pressure for clamping ..... 5

3-4 Electrical Connection ..... 7

3-5 Trial running ..... 7

3-6 Setting grid shift amount for Zero-point return ..... 8

4. Mechanism & Inspection ..... 9

4-1 Mechanism ..... 9

4-2 Backlash Adjustment ..... 10

4-3 Brake Clamp/Unclamp Mechanism ..... 13

4-4 Zero-point return Mechanism ..... 14

5. Appendix

5-1 Relation between workpiece diameter & length for allowable maxium load ..... 15

5-2 Relation between workpiece diameter & length for allowable work ineatia ..... 16

## 1. Preface

NIKKEN CNC circular table consists of precisely assembled mechanism including micron-accuracies and it will provide a long-term and trouble-free operation under normal machining conditions.

Although it should not be necessary to adjust gear backlashes of this circular table, methods of adjusting backlash are attached hereto for reference. The circular table does not include any part which worsens its accuraccy due to any normal wear, so that adjustment of the gear backlashes required after four to five operational years have passed. You are kindly requested to use this circular table as it was adjusted when shipped from our factory unless it is broken due to collision.

Please keep "Inspection Table", "Common Instruction Manual" and "Individual Instruction Manual" in your file. If there any trouble occurs on the circular table, please advise us of all letters engraved on its name plate.

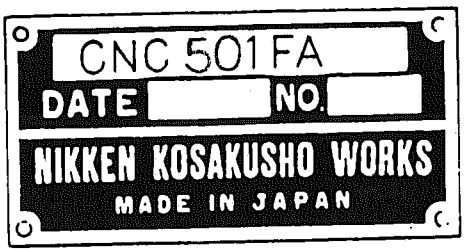

## 2. Dimentions & Specification

Please see attached dimentional drawing for the details.

## 3. Preparation for operation

The following preparations and trial running etc. are required until the CNC rotary table is practically used.

1) Unpacking, transfer and installation
2) Filling lubricating oil
3) Supplying hydrauric pressure for clamping
4) Electrical connection
5) Trial running
6) Setting grid shift amount for Zero-point return
7) Example of program

### 3-1 Unpacking, transfer and installation

<1> Unpacking, transfer and installation

Careful attention should be paid to the transfer of the table after it is unpacked. Do not move it using hands as far as possible.

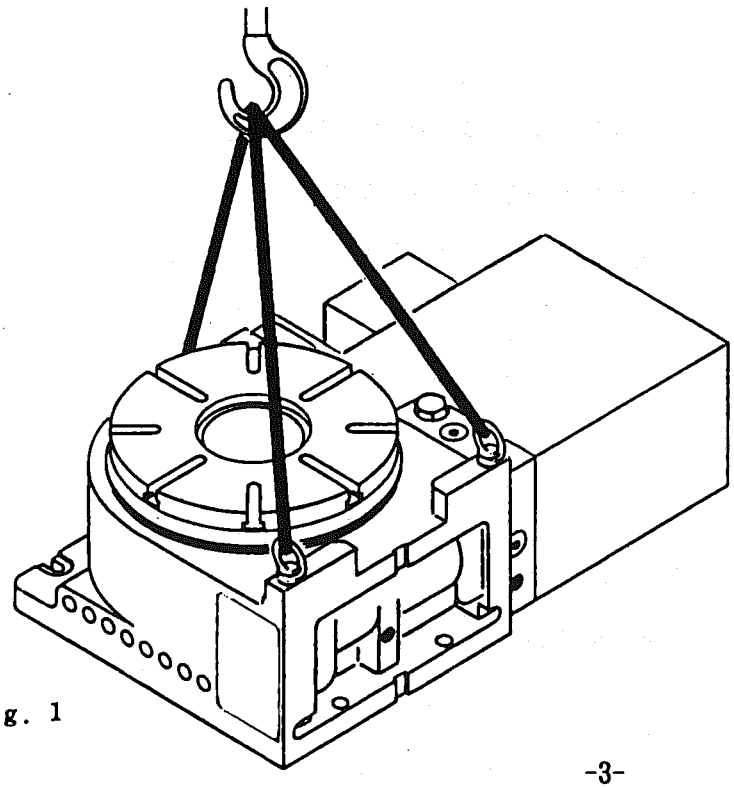

Hook a sling through the eye bolt and carefully move the table while keeping the balance of the table.
After transfer please remove the eye bolts.

Fig. 1

<2> Wiping off rust-preventive oil

Carefully wipe off rust-preventive oil applied on the whole surface of the table when slipped by using a waste cloth etc. Never use benzine, gasoline etc. which would produce rust.

<3> Installation of Table

Clean the table top surface of machine tools and the bottom surface of CNC table after ensuring no burr and scar existing thereon. Install the CNC rotary table on a place most suitable for the operation.

Fit the guide piecies to the bottom surface of CNC rotary table, then set them in T-slot of machine tools. If clearance between the T-slot and guide piece is large, set it by pulling it to a side of T-slot. (As for stepped guide piece, reference should be made to "List of special accessories".) Tighten and secure the table by using the attached guide blocks.

3-2 Filling lubricating oil

The enclosed table case will not permit cutting oil to mingle therein and lubricating oil to leak cut. Make sure of lubricating oil, check the oil pots every day, and supply a proper quantity of oil if it is insufficient. Supply oil so as to replace entire quantity with new oil at least once per year.

Two oil filling ports are provided for the body inside and the gear box. As for location of them, reference should be made to "Individual Instruction Manual".

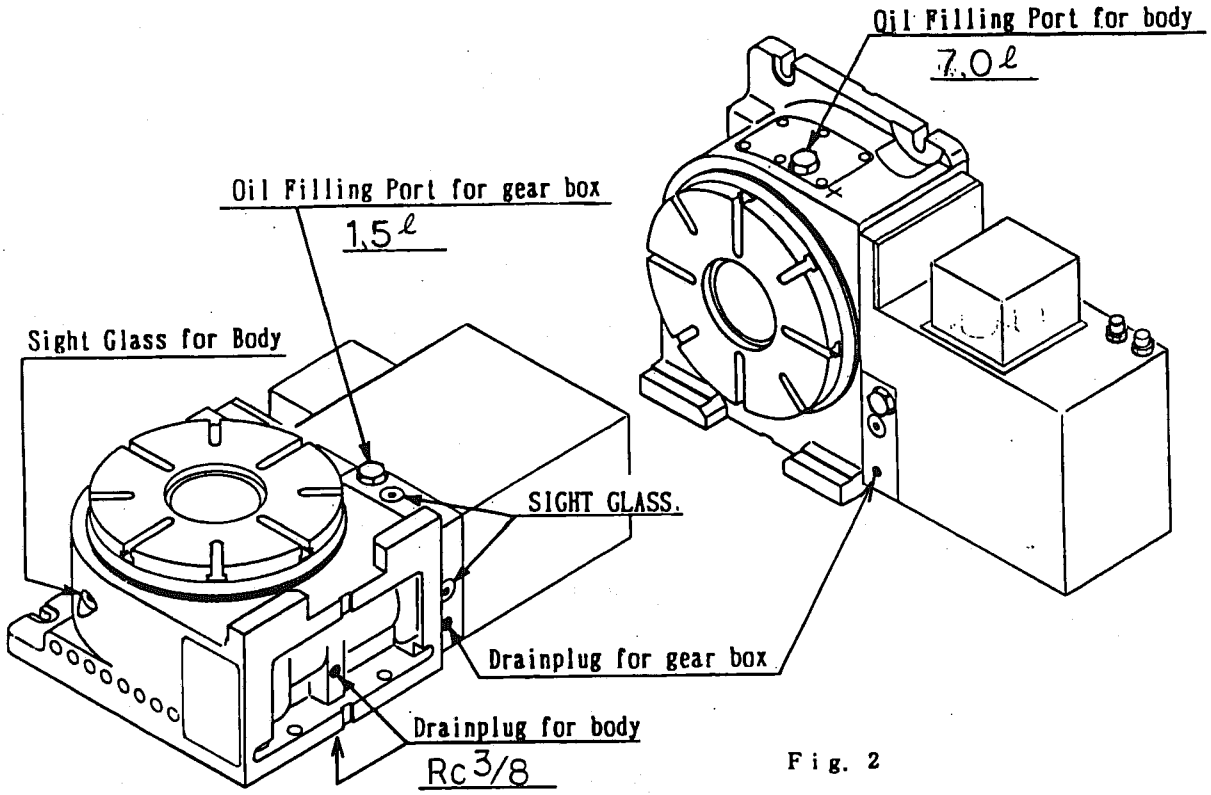


Fig. 2

Super Multi oil #100 has been filled in all the NIKKEN rotary tables when supplied. In the event when an oil other than above is supplied, be sure to suply new oil only after discharging the above oil which has been filled in when shipped.

| Oil maker | Brand name |
|---|---|
| Idemitsu | Super Multi oil #100 |
| Kyodo sekiyu | Leduxtus #68-100 |
| Cosmo oil | Bio-gear SP68-100 |
| Nippon sekiyu | Bon-nock SP68-100 |
| Mitsubishi sekiyu | Diamond Gear Lub SP100 |
| Mobile oil | Mobile gear #626 |
| Esso standard | Spaltan EP-68 |
| Shell oil | Omala oil #68-100 |

3-3 Hydraulic Supply for brake clamping

<1> Hydraulic Supply

Table brake clamping is activated with hydraulic Supply. Solenoid valve is not built-in the table. Please see attached Hydraulic diagram for the details.

NOTE: 1. Hydraulic Supply pessure should be within 35kgf/cm$^2$. Please supply reducing valve <2> on the pump, if the pressure is more than 35kgf/cm$^2$.

2. Oil flow on the pump <1> should be more than 10ℓ/min.

3. In case of use of check valve on return diagram, please set valve opening pressure at less than 0.5kgf/cm$^2$.

4. At the standard diagram, the brake will be unclamped when the solenoid valve is energized.

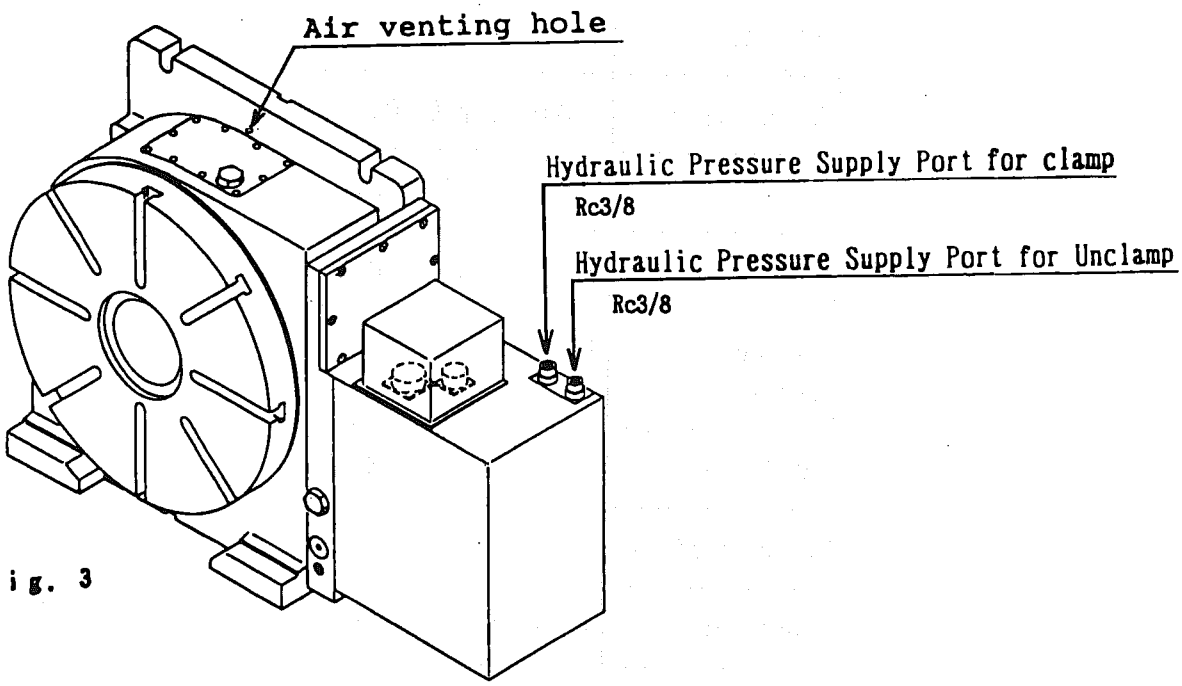


Fig. 3

<2>Hydraulic Diagram

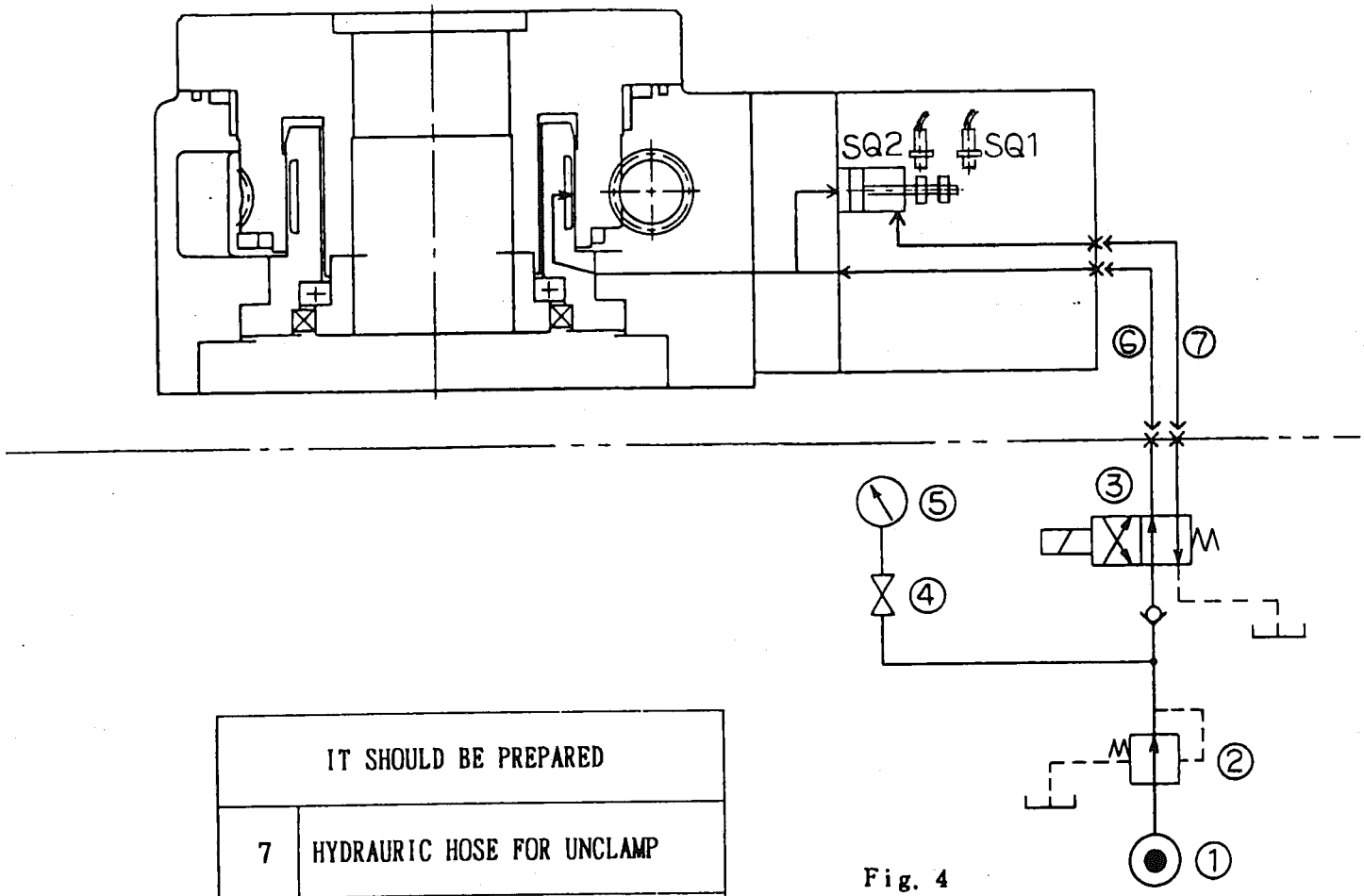


Fig. 4

| IT SHOULD BE PREPARED | |
|---|---|
| 7 | HYDRAURIC HOSE FOR UNCLAMP |
| 6 | HYDRAURIC HOSE FOR CLAMP |
| 5 | PRESSURE GAUGE |
| 4 | GAUGECOCK |
| 3 | SOLENOID VALVE |
| 2 | REDUCING VALVE |
| 1 | PUMP |
| NO. | ITEM |

## 3-4 Electrical Connection

Please connect CNC table with M/C Controller correctly according to attached wiring diagram.

Starting table with brake clamped would cause damage to the table.

Unless specified, standard wiring will be done at internal cables of Motor Guard for Motor & Pulse coder connections. (except AC Servo Motor)

In case of opposite wiring is required, at AC Servo please change wiring on NC controller or alter the parameter to opposite wiring.

## 3-5 Test running

<1> Connect Hydraulic supply correctly.

<2> Do not load any fictual/components on the table at this stage.

<3> Send Brake Clamp (M10, or M68 etc.) and Unclamp (M11, or M69 etc.) Signal from M/C Controller and check if the brake is working properly. Use G Code G10 (Unclamp) & G11 (Clamp) in case of NIKKEN 8800AX Controller

```
ex : N000          G10 G13 (Unclamp & Single running mode)
     N001   J000   G11     (After clamp, jump to N000 back)
```

<4> For Test running of rotary axis, drive the table Clockwise & Counter Clockwise each 2 times at slow feed (approx. F360).

Check if the table runs smoothly without any ploblems, then increase the speed.

3-6 Setting the grid shift amount for Zero-point return

(only for additional axis control)

Zero point is the posotion where the table reference T-slot becomes parallel with the table bottom surface and the base line plate indicates "0" at scale of the table.

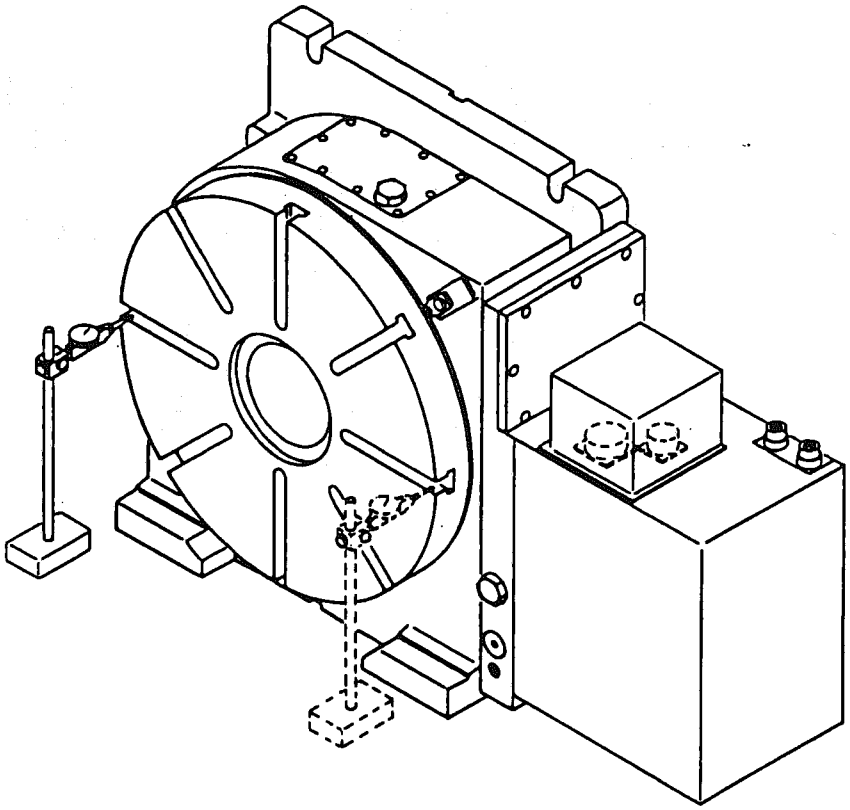

Fig. 5

The grid shift amount of each table is mentioned at Parameter ist attached with the CNC table.

<1> Input the amount at parameter on your Machine controller.

<2> Rotate the table a few degrees in CW direction by jog mode, then return it to the machine Zero point.

<3> Check the parallelism of the table reference T-slot by using dial gauge as above and input the suitable amount at the parameter.

<4> Repeat the procedures <1>-<3> and the amount you can get when the parallelism of the table reference T-slot is confirmed is correct grid shift amount.

## 4. Mechanism & Adjustment

### 4-1 Mechanism

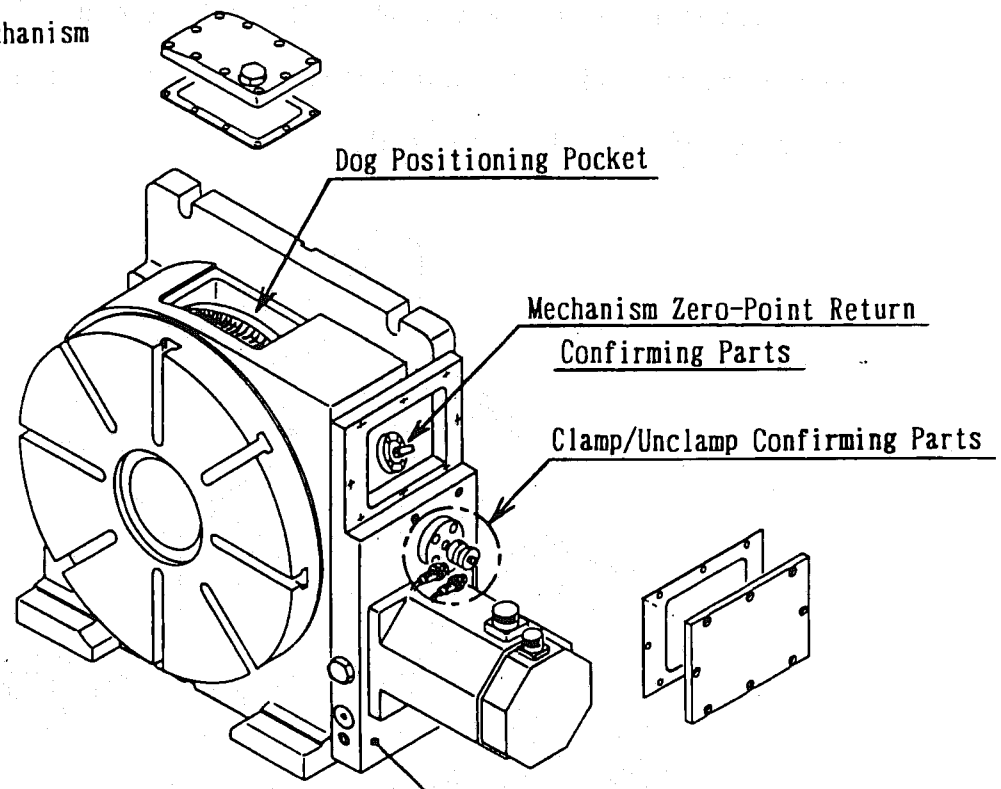


Fig. 6

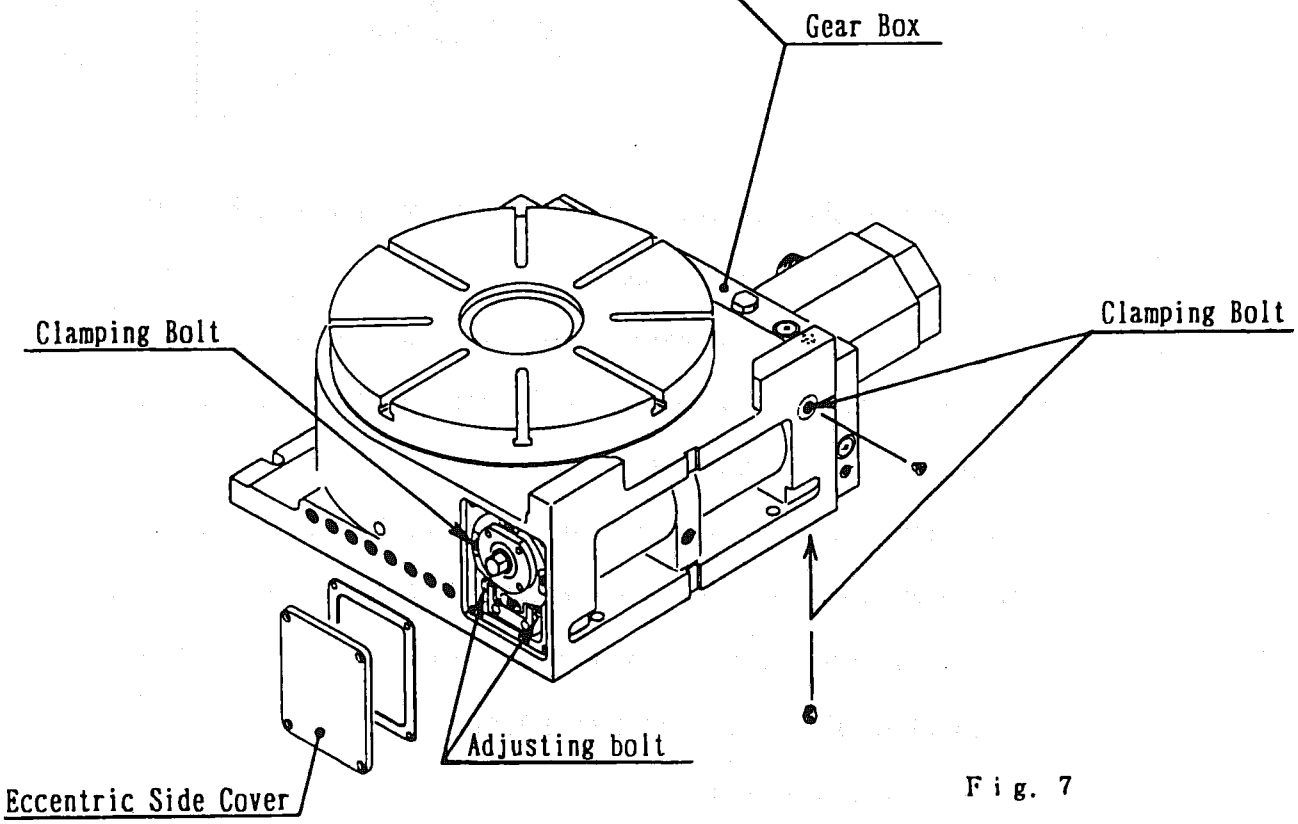


Fig. 7

## 4-2 Adjustment of Backlash

The Worm Screw rotates in the totally-enclosed oil bath and the reduction mechanism is composed of a combination of the special ion-nitrided worm wheel and the hardened worm screw, so that it is not necessary to adjust the backlash until four to five years have elapsed after the rotary table is put in service.
However, if necessary, the backlash can be adjusted according to the following procedured.

<1> Unclamping the brake. Execute unclamp command.

<2> Confirming the backlash.
Read a deflection of the dial gauge <A> by inserting the flat plate <H> into a T-slot and manoeuvre the face plate clockwise and anti-clockwise through the flat plate by hand.
A backlash within 10-15 microns is intial amount has been set at factory, and the adjustment should be done in the event when a backlash of 50 microns or more is observed.
The measurement is to be done at eight spots of every 45° of table (Please see fig. 8 for <A> & <H>) .

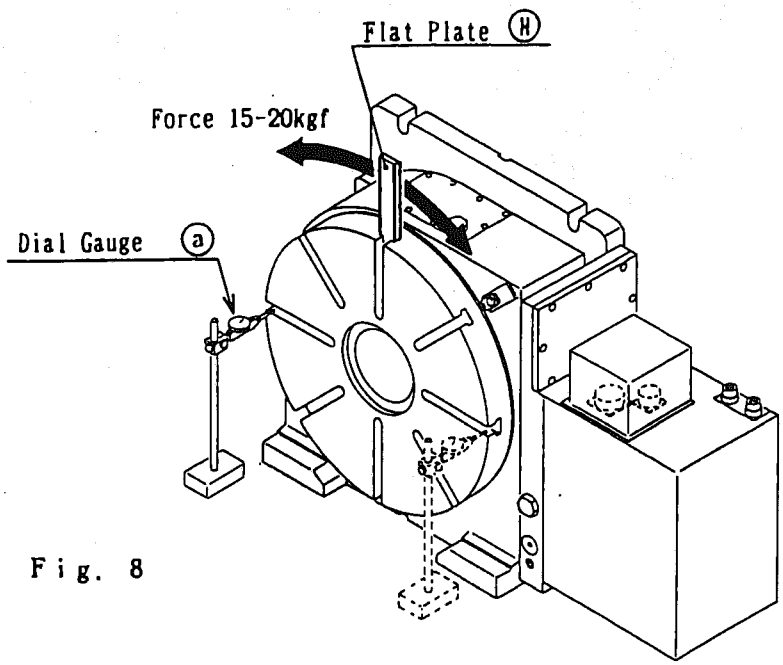


Fig. 8

<3> Backlash Adjustment on Worm Gear

(1)

(2) Loosen the screw.2 off.on Eccentric Side Cover <b> and remove the cover.

(3) Loosen Eccentric Housing Clamp Screw <c> slightly. (one to two turns tap)

(4) Pull Blankplug <d> out.

(5) Loosen Eccentric Housing Fix Screw <e> under the Blankplug by 2-3 turns tap and slightly tap the head of the screw to release Clamp Piece <f>.thus the eccentric housing becomes free to be adjusted.

(6) Preset dial gauge <a> as Fig.8 shows and loosen Backlash Adjust Screw <h> tighten Screw <i> in CW direction.then the housing starts turning and the backlash between worm screw and worm wheel is getting closer to 0.

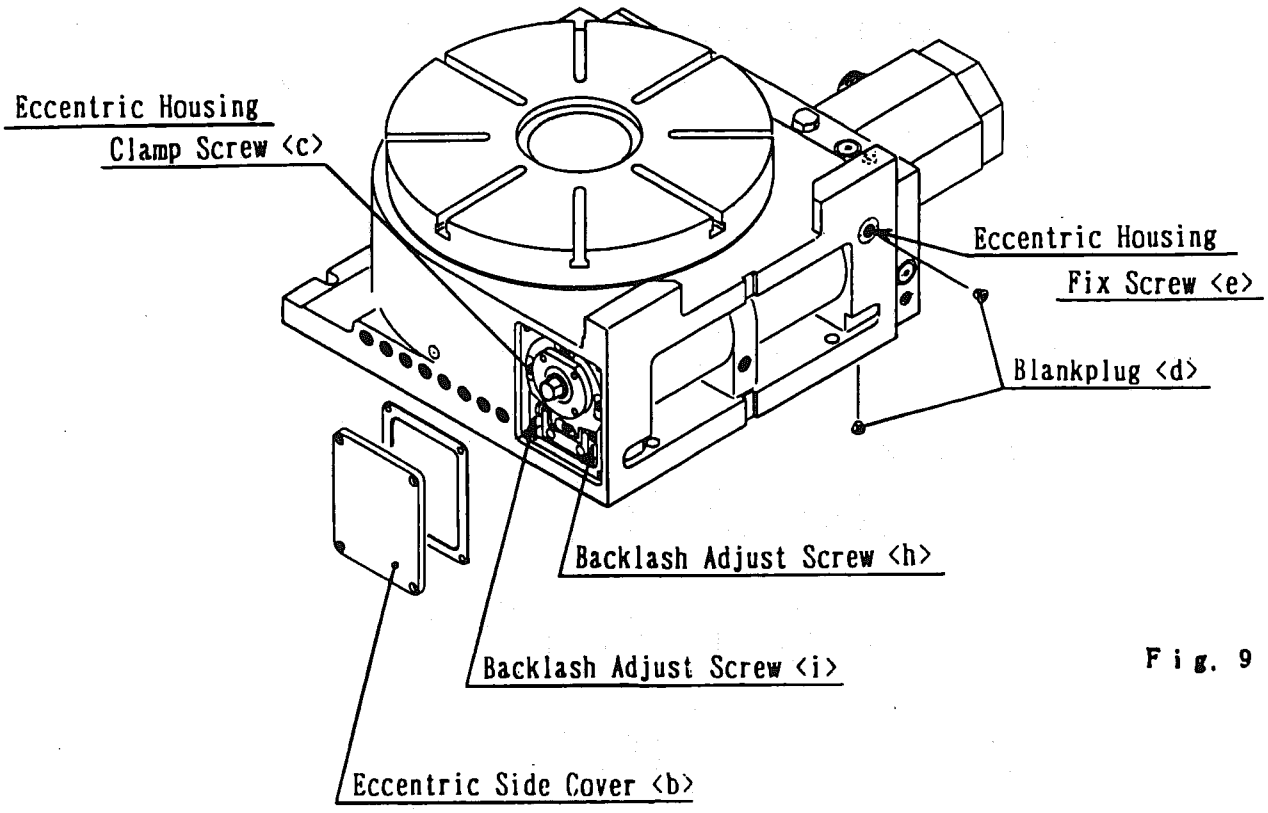


Fig. 9

(7) Insert the flat plate <H> into a T-slot of face plate and maneuver the face plate clockwise and anti-clockwise through the plate by hand and adjust the backlash to 10-15 microns by using the screw <h> & <i> watching the deflection of the dial gauge <a>.

(8) The backlash between Worm Screw gear & Motor shaft gear can be adjusted by shifting the motor location slightly up & down after loosening of Motor Setting Bolts.

(9) After Completion of the adjustment, tighten the screw <c> & <e>, then put Blankplugs back on to original position.

(10) Measure the backlash again and confirm to that it has been adjusted to 5-10 microns.

(11) After the confirmation, put all covers back to original

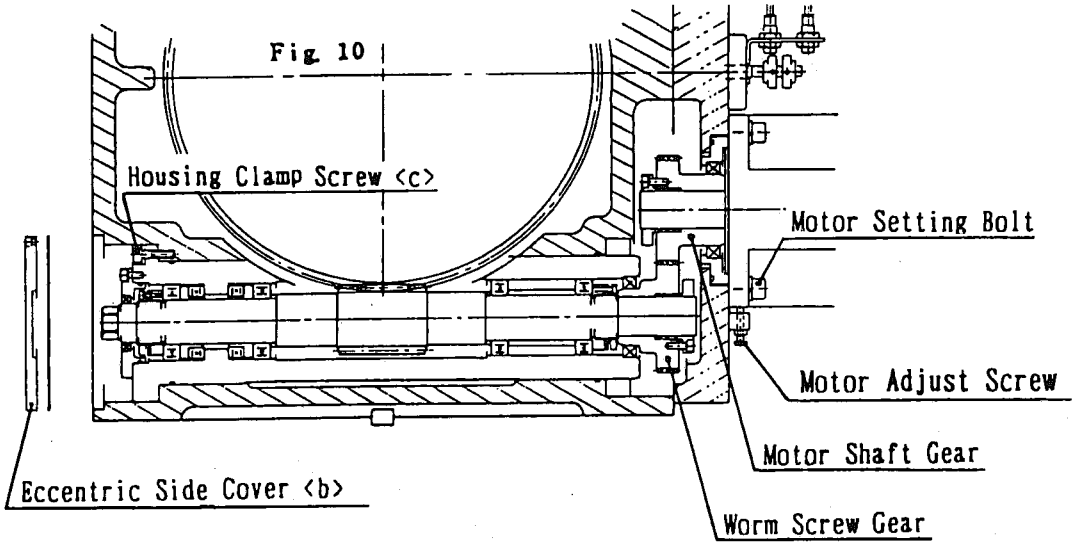


Fig. 10

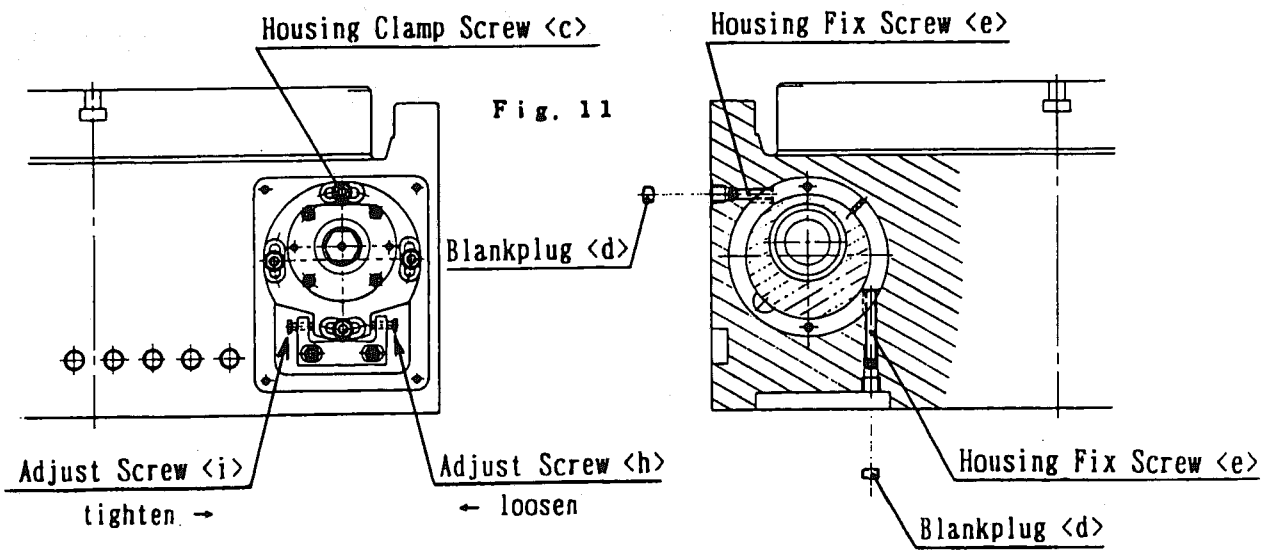


Fig. 11

4-3 Brake Clamp/Unclamp Mechanism

1) When clamp command is supplied with hydraulic pressure, the thin wall portion on clamp sleeve expands toward the table internal bore surface, thus the brake becomes clamped.
The Hydraulic pressure is also supplied to clamp confirming mechanism. As well as clamp sleeve , in order to actuate clamp confirming Limit switch by pushing plunge.

2) When the hydraulic pressure is released, clamp sleeve gets back back original shape. For its metal elasticity and this is unclamp position.
When the pressure is released, the plunge retuns to its original position and actuate unclamp confirming Limit switch.

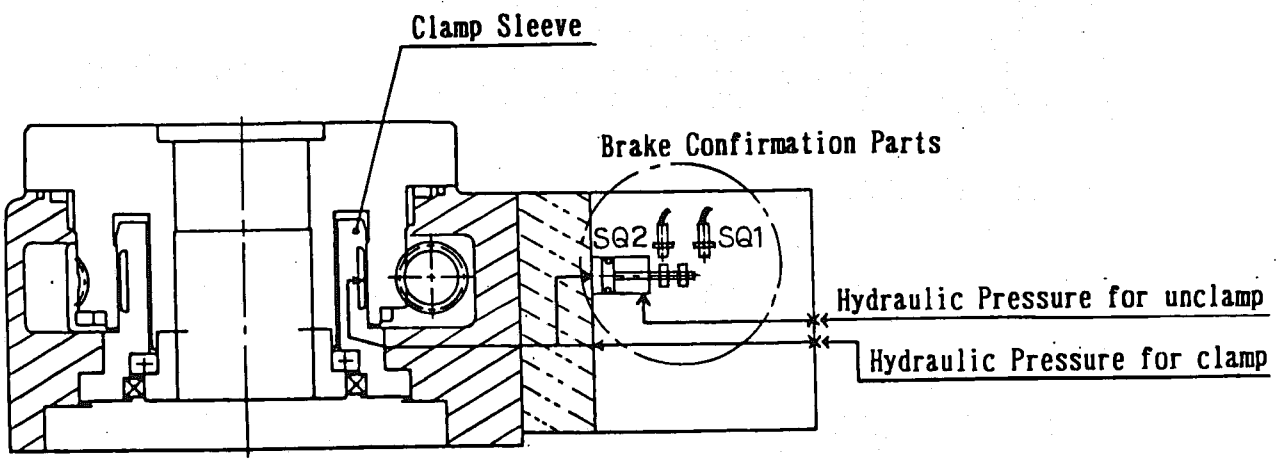


Fig. 12

## 4-4 Zero-Point Return Mechanism

Zero-Point Return Proximity Switch is located as Fig. 13.

Please adjust the position of dog, when the zero-point is out of position at every 4 °

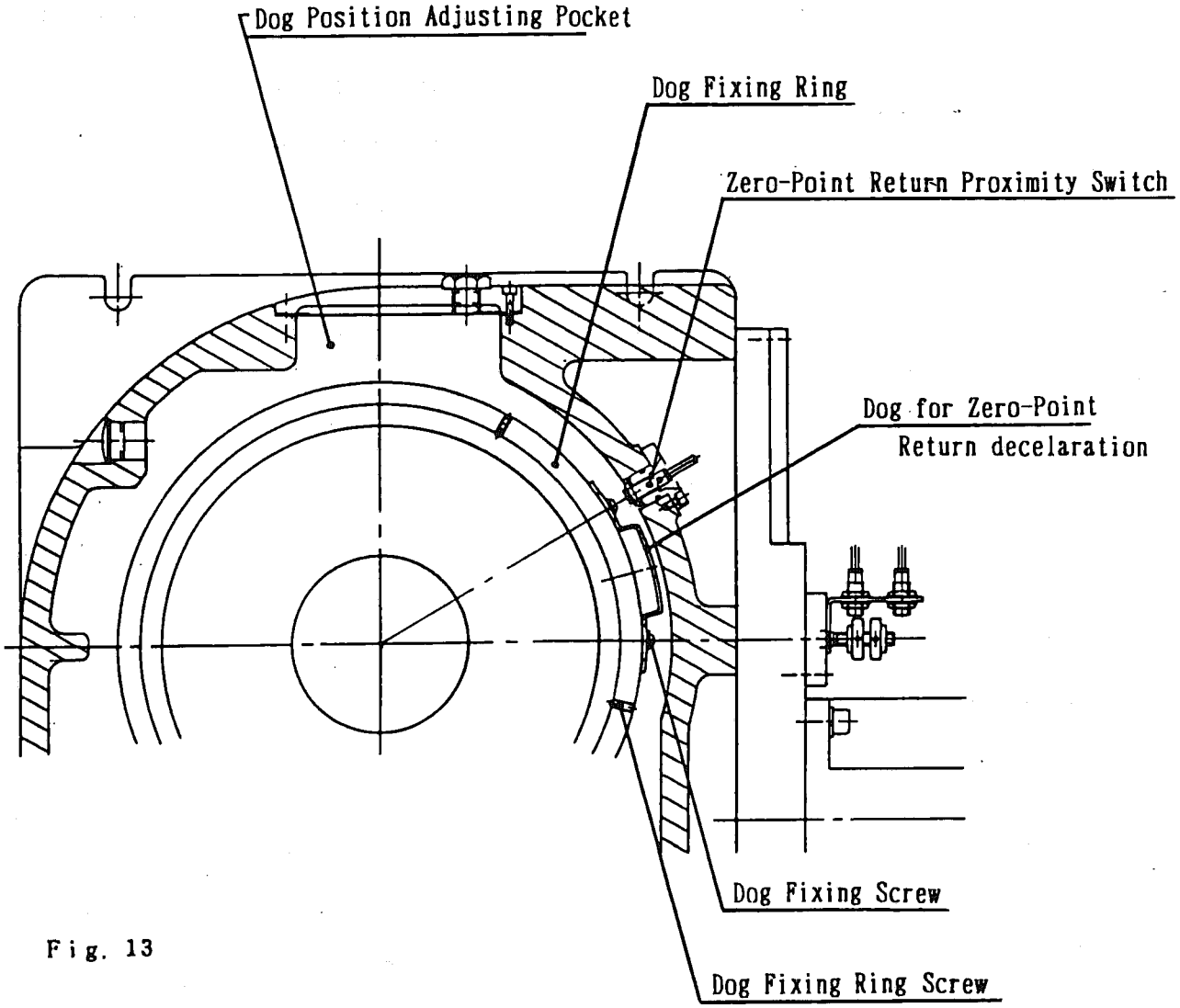


Fig. 13

At large amount adjustment required, alter the position of dog fixing ring.

And at small adjustment, alter the position of dog itself.

## 5. Appendix

### 5-1 Relation between work dia. and length for allowable max. load

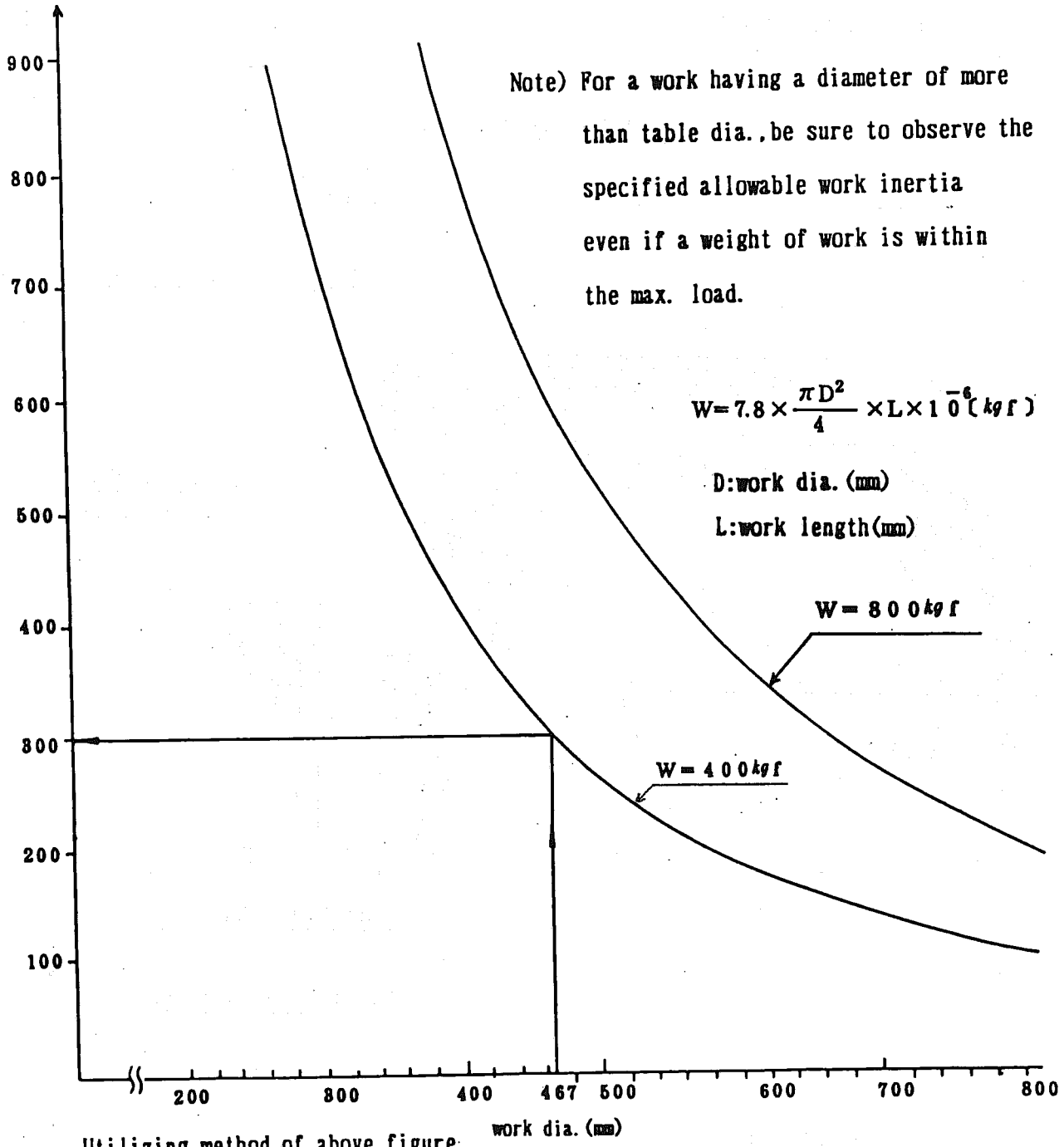


Utilizing method of above figure

A work, having dia. 467mm and a length of within 300mm, will have an allowable max. load of within 400kgf.

## 5. Appendix

### 5-2 Relation between work dia. and length for allowable work inertia

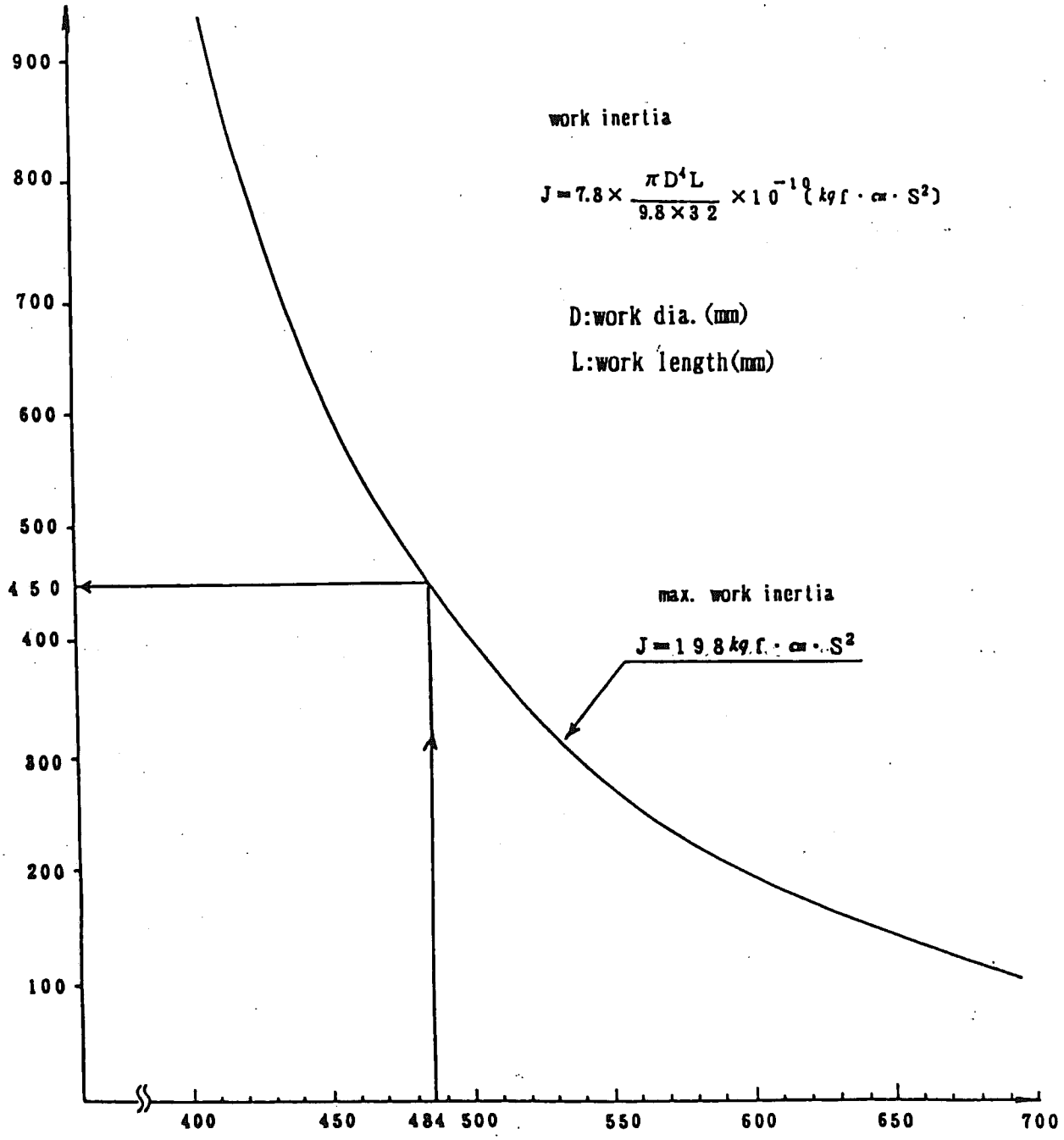


Utilizing method of above figure

A work, having dia.484mm and a length of within 450mm, will have an allowable work inertia of within 198 kgf. cm. $S^2$