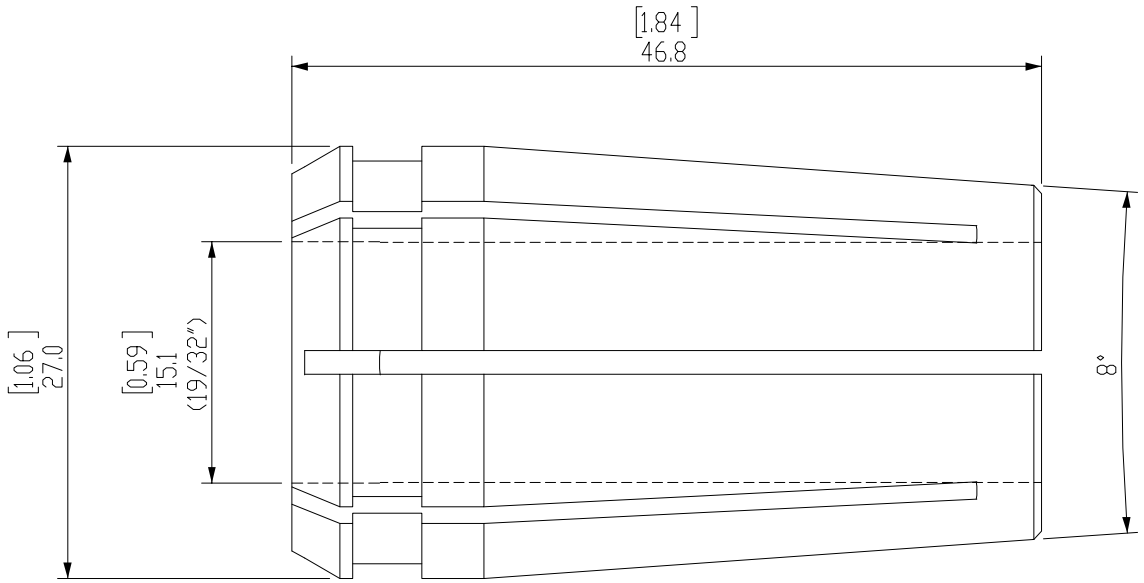

REVISIONS			
REV.	DESCRIPTION	DATE	APPROVED

Notes:

UNLESS OTHERWISE SPECIFIED:

DIMENSIONS ARE IN MM [INCH]
TOLERANCES:
FRACTIONAL ±
ANGULAR: MACH ± BEND ±
TWO PLACE DECIMAL ±
THREE PLACE DECIMAL ±

INTERPRET GEOMETRIC
TOLERANCING PER: ANSI Y 14.5M

THIRD ANGLE PROJECTION

	NAME	DATE
DRAWN		
CHECKED		
ENG APPR.		
MFG APPR.		
Q.A.		

PROPRIETARY AND CONFIDENTIAL
THE INFORMATION CONTAINED IN THIS DRAWING IS THE SOLE PROPERTY OF LYNDEX NIKKEN. ANY REPRODUCTION IN PART OR AS A WHOLE WITHOUT THE WRITTEN PERMISSION OF LYNDEX NIKKEN IS PROHIBITED.

75TG COLLET 19/32"

LYNDEX NIKKEN

SIZE	DWG. NO.	REV
A	075-038(C)	

SCALE: 2:1 | SHEET 1 OF 1