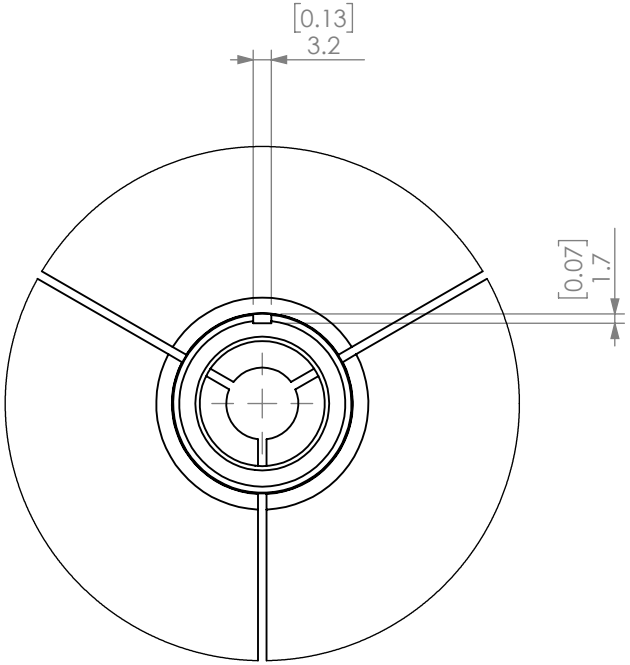

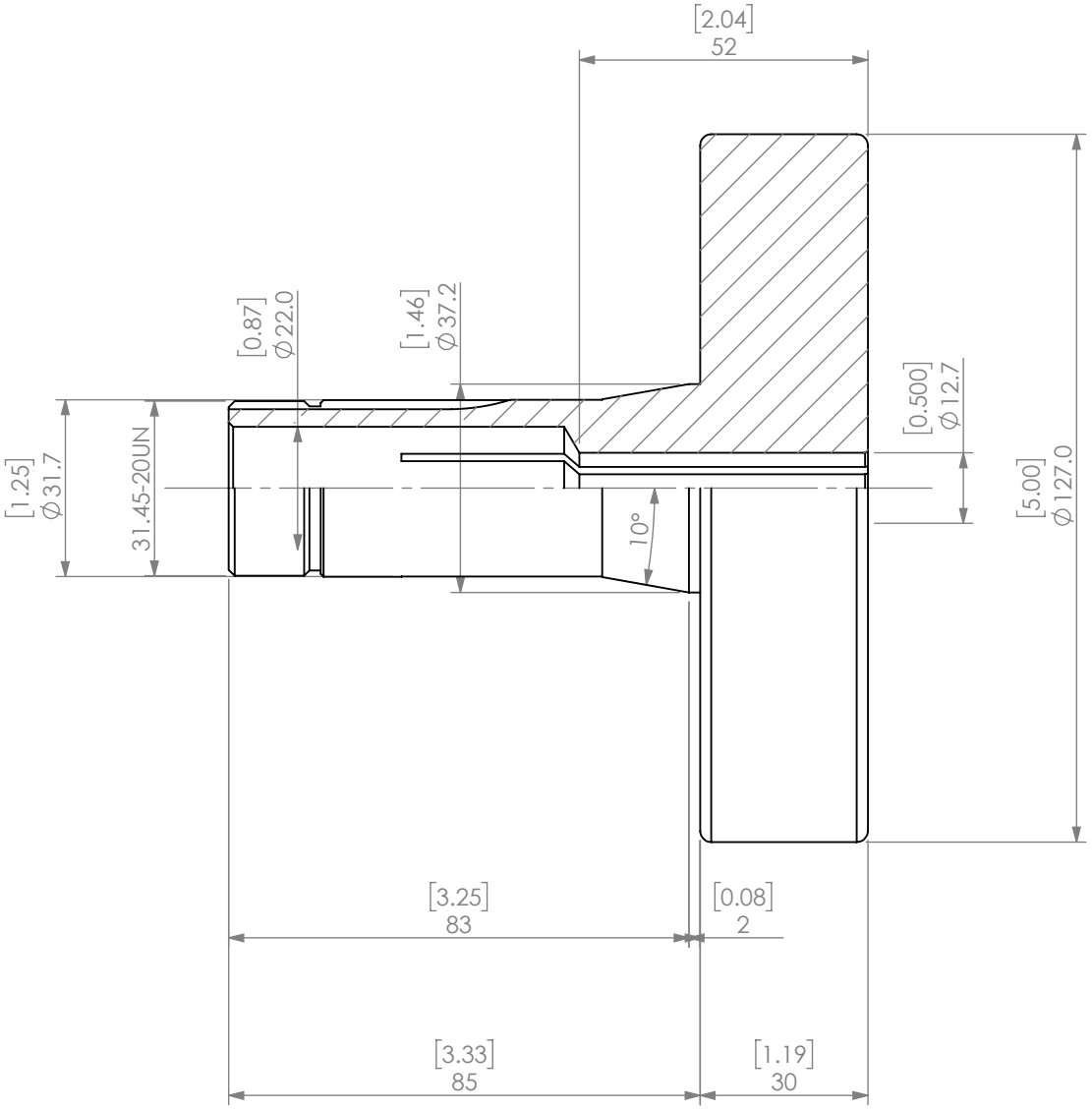

PROPRIETARY AND CONFIDENTIAL

THE INFORMATION CONTAINED IN THIS DRAWING IS THE SOLE PROPERTY OF LYNDEX NIKKEN. ANY REPRODUCTION IN PART OR AS A WHOLE WITHOUT THE WRITTEN PERMISSION OF LYNDEX NIKKEN IS PROHIBITED. DRAWING SUBJECT TO CHANGE WITHOUT NOTICE.

	NAME	DATE
DRAWN	AM	12/18/2020

NOTES:

5C STEP COLLET TIR 5"

LYNDEX NIKKEN

SIZE	DWG. NO.	REV.
A	550-005	
SCALE 3:4		SHEET 1 OF 1

5 4 3 2 1