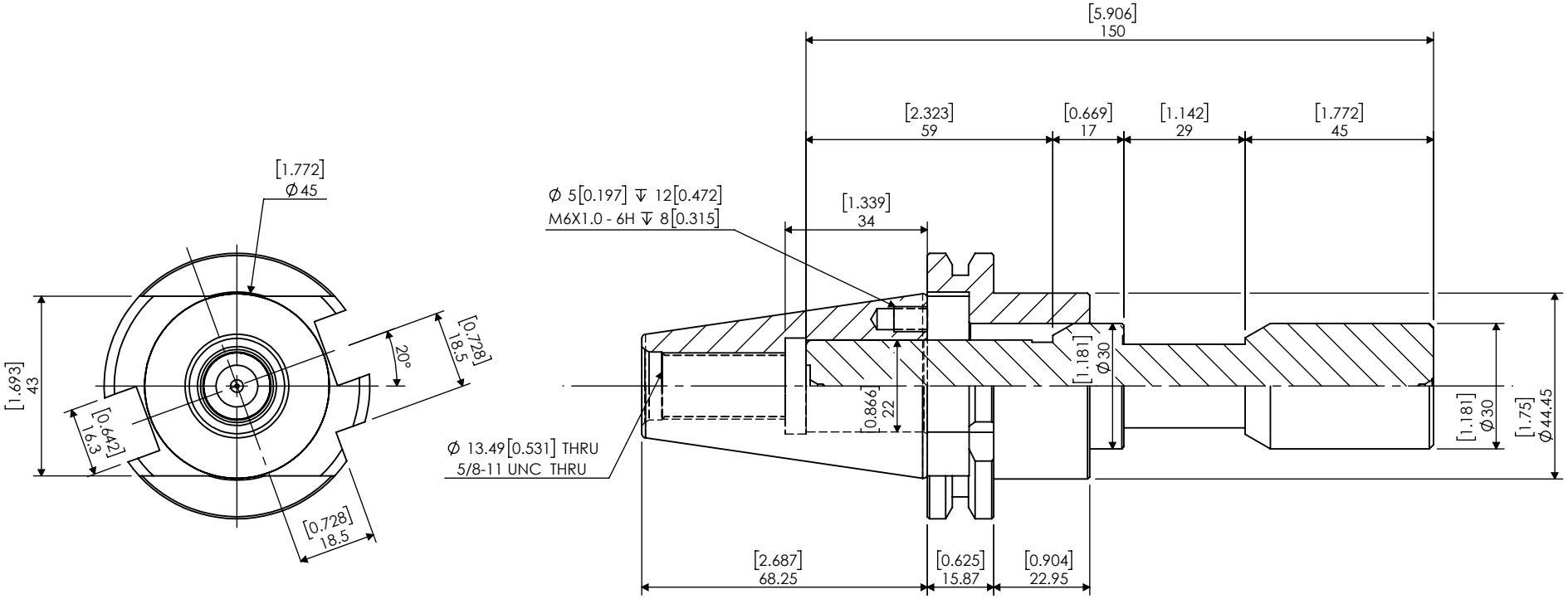


| ITEM NO. | PART NUMBER | DESCRIPTION | QTY. |
|---|---|---|---|
| 3 | ATC-PIN_SHAFT-40 | PIN/SHAFT FOR ATC ALIGNMENT TOOL #40 | 1 |
| 2 | ATC_CAT40-FLANGE | FLANGE FOR ATC ALIGNMENT TOOL CAT40 | 1 |
| 1 | ATC-TAPER-40 | TAPER FOR ATC ALIGNMENT TOOL CAT40 | 1 |

**PROPRIETARY AND CONFIDENTIAL**

THE INFORMATION CONTAINED IN THIS DRAWING IS THE SOLE PROPERTY OF LYNDEX NIKKEN. ANY REPRODUCTION IN PART OR AS A WHOLE WITHOUT THE WRITTEN PERMISSION OF LYNDEX NIKKEN IS PROHIBITED. DRAWING SUBJECT TO CHANGE WITHOUT NOTICE.

| | NAME | DATE |
|---|---|---|
| DRAWN | BT | 12/30/2021 |

NOTES:

ATC Alignment Tool Set CAT40/ISO40 MAHO Notch

LYNDEX NIKKEN

| SIZE | DWG. NO. | REV. |
|---|---|---|
| A | ATC-ALIGN-CAT40 | |
| SCALE 1:1.5 | | SHEET 1 OF 1 |

5 4 3 2 1