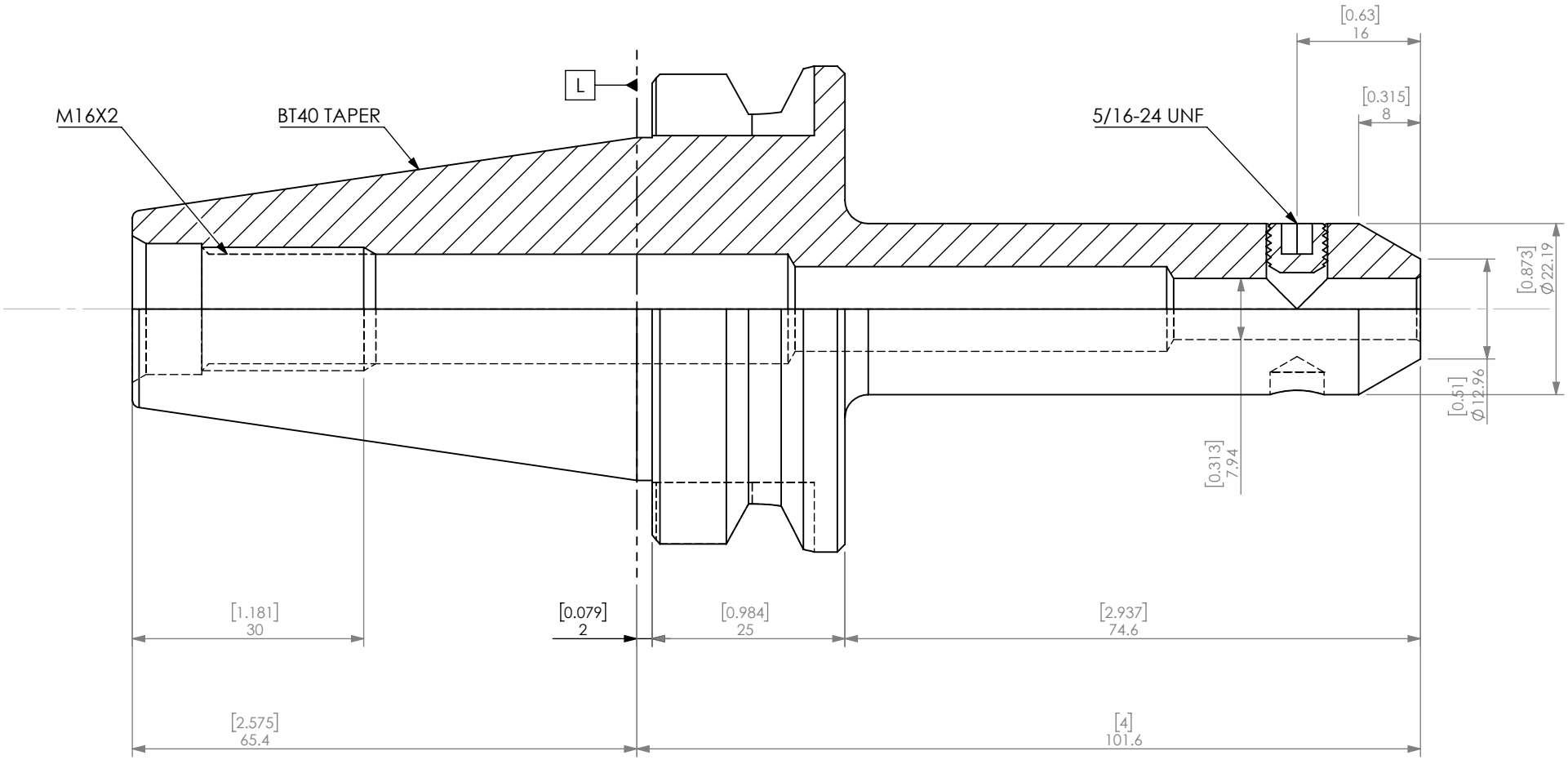

ITEM NO.	PART NUMBER	DESCRIPTION	QTY.
2	S5_16-24X1_4	Screw Size: 5/16-24X1/4	1
1	B4006-0312-4.00	BT40 5/16" END MILL HOLDER 4" L	1

PROPRIETARY AND CONFIDENTIAL

THE INFORMATION CONTAINED IN THIS DRAWING IS THE SOLE PROPERTY OF LYNDEX NIKKEN. ANY REPRODUCTION IN PART OR AS A WHOLE WITHOUT THE WRITTEN PERMISSION OF LYNDEX NIKKEN IS PROHIBITED. DRAWING SUBJECT TO CHANGE WITHOUT NOTICE.

	NAME	DATE
DRAWN	SM	1/14/2022

NOTES:

BT40 5/16" END MILL HOLDER 4" L

LYNDEX NIKKEN

SIZE A | DWG. NO. B4006-0312-4.00 | REV.

SCALE 1.25:1 | SHEET 1 OF 1

5 4 3 2 1