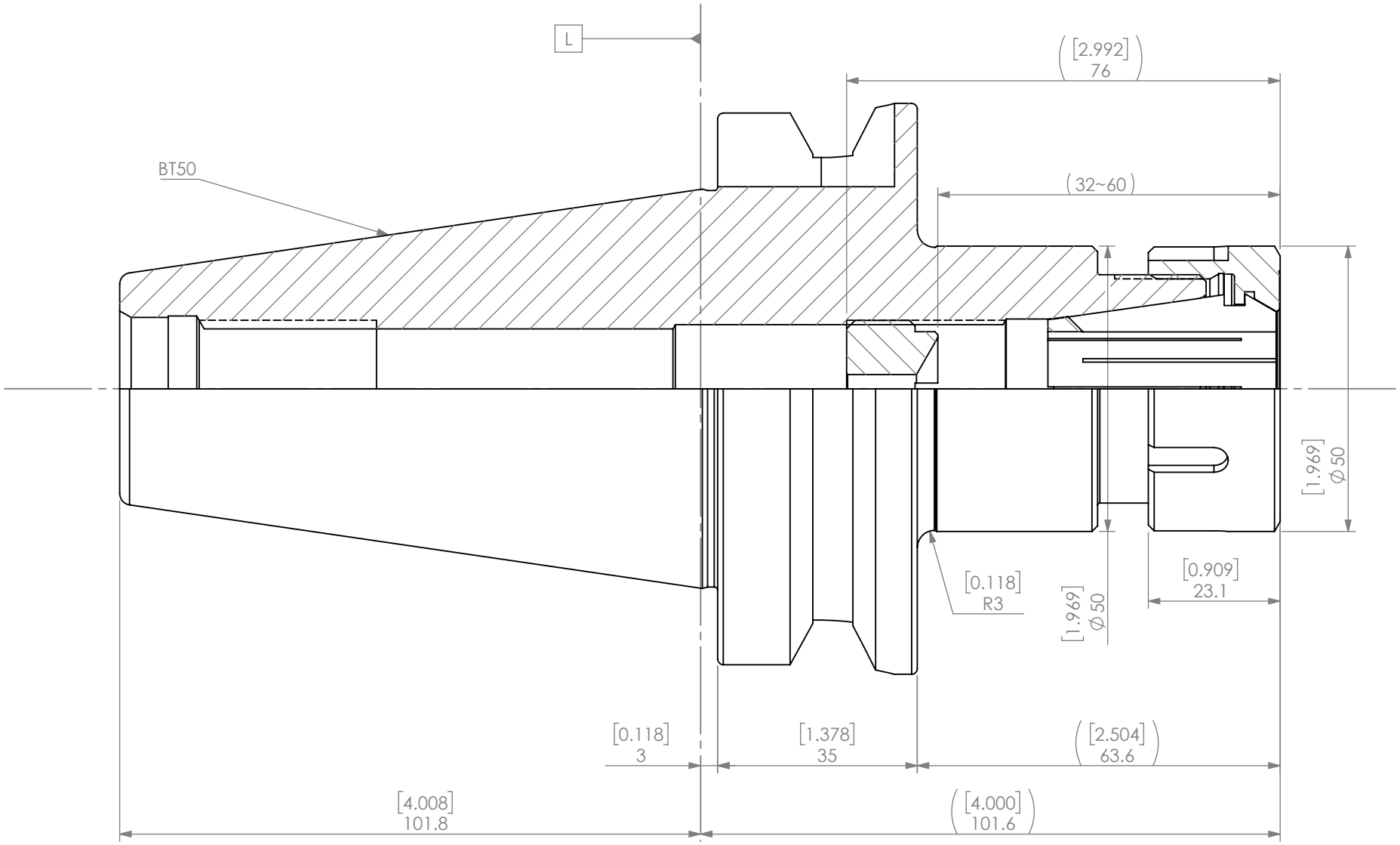


| ITEM NO. | PART NUMBER | DESCRIPTION | QTY. |
|---|---|---|---|
| 4 | ER32-SCREW(C) | ER32 BACK UP SCREW [M24-P1.5] | 1 |
| 3 | E32-XXX | ER32 COLLET [OPTION] | 1 |
| 2 | E32-NUT | ER32 BEARING NUT [M40-P1.5] | 1 |
| 1 | B5007-0032-4.00 | BT50 ER32 COLLET CHUCK | 1 |

**PROPRIETARY AND CONFIDENTIAL**

THE INFORMATION CONTAINED IN THIS DRAWING IS THE SOLE PROPERTY OF LYNDEX NIKKEN. ANY REPRODUCTION IN PART OR AS A WHOLE WITHOUT THE WRITTEN PERMISSION OF LYNDEX NIKKEN IS PROHIBITED. DRAWING SUBJECT TO CHANGE WITHOUT NOTICE.

| | NAME | DATE |
|---|---|---|
| DRAWN | BT | 5/13/2021 |

NOTES:

BT50 ER32 COLLET CHUCK

LYNDEX NIKKEN

SIZE A | DWG. NO. B5007-0032-4.00 | REV.

SCALE 1:1 | SHEET 1 OF 1

5 4 3 2 1