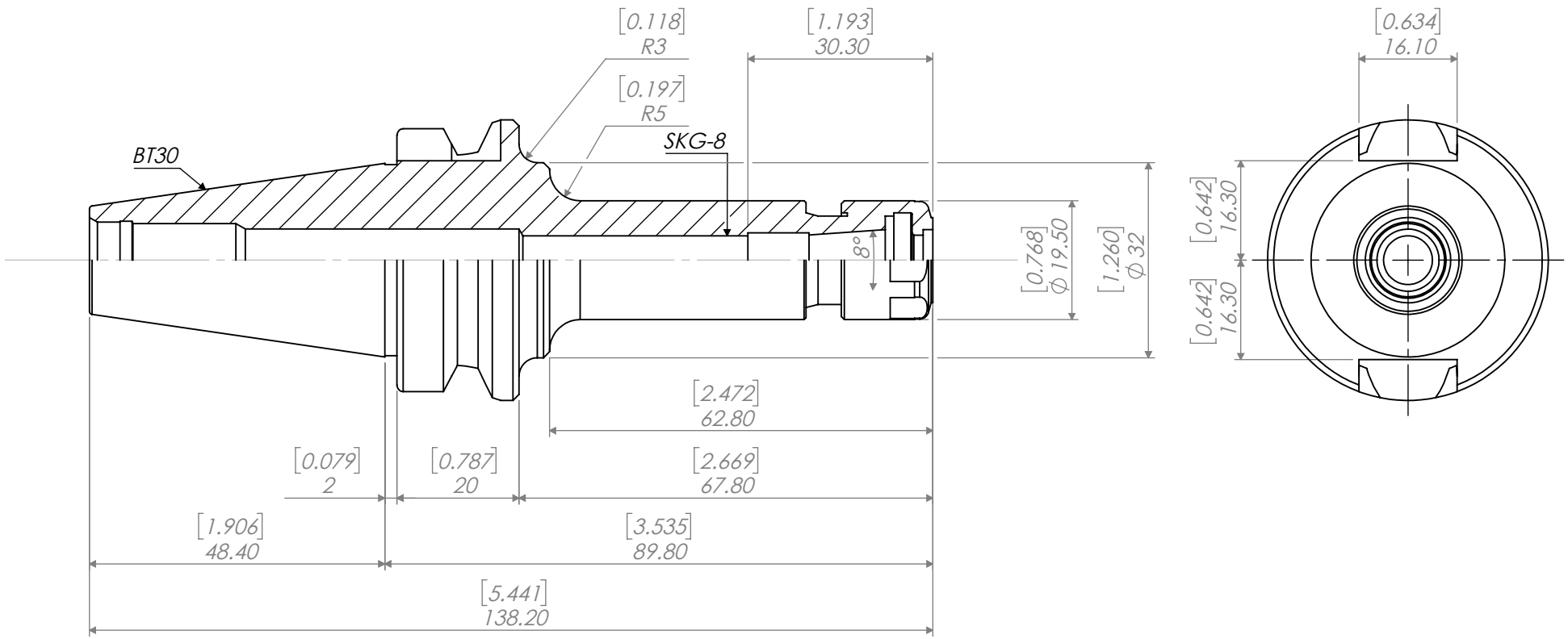

REVISIONS			
REV.	DESCRIPTION	DATE	APPROVED

NOTES:

NUT#: SKN-6WB
BACK-UP SCREW#: SKG-8
WRENCH#: SKL-6W

UNLESS OTHERWISE SPECIFIED:

DIMENSIONS ARE IN MM [INCH]

DIMENSIONS ARE FOR REFERENCE ONLY. DRAWING IS SUBJECT TO CHANGE WITHOUT FURTHER NOTICE.

INTERPRET GEOMETRIC TOLERANCING PER: ASME Y 14.5M

THIRD ANGLE PROJECTION

	NAME	DATE
DRAWN	AN	7/12/18
CHECKED		
ENG APPR.		
MFG APPR.		
Q.A.		

PROPRIETARY AND CONFIDENTIAL

THE INFORMATION CONTAINED IN THIS DRAWING IS THE SOLE PROPERTY OF LYNDEX NIKKEN. ANY REPRODUCTION IN PART OR AS A WHOLE WITHOUT THE WRITTEN PERMISSION OF LYNDEX NIKKEN IS PROHIBITED.

BT30 SK6 COLLET CHUCK

LYNDEX NIKKEN

SIZE	DWG. NO.	REV
A	BT30-SK6-90	
SCALE: 1/1		SHEET 1 OF 1

5 4 3 2 1