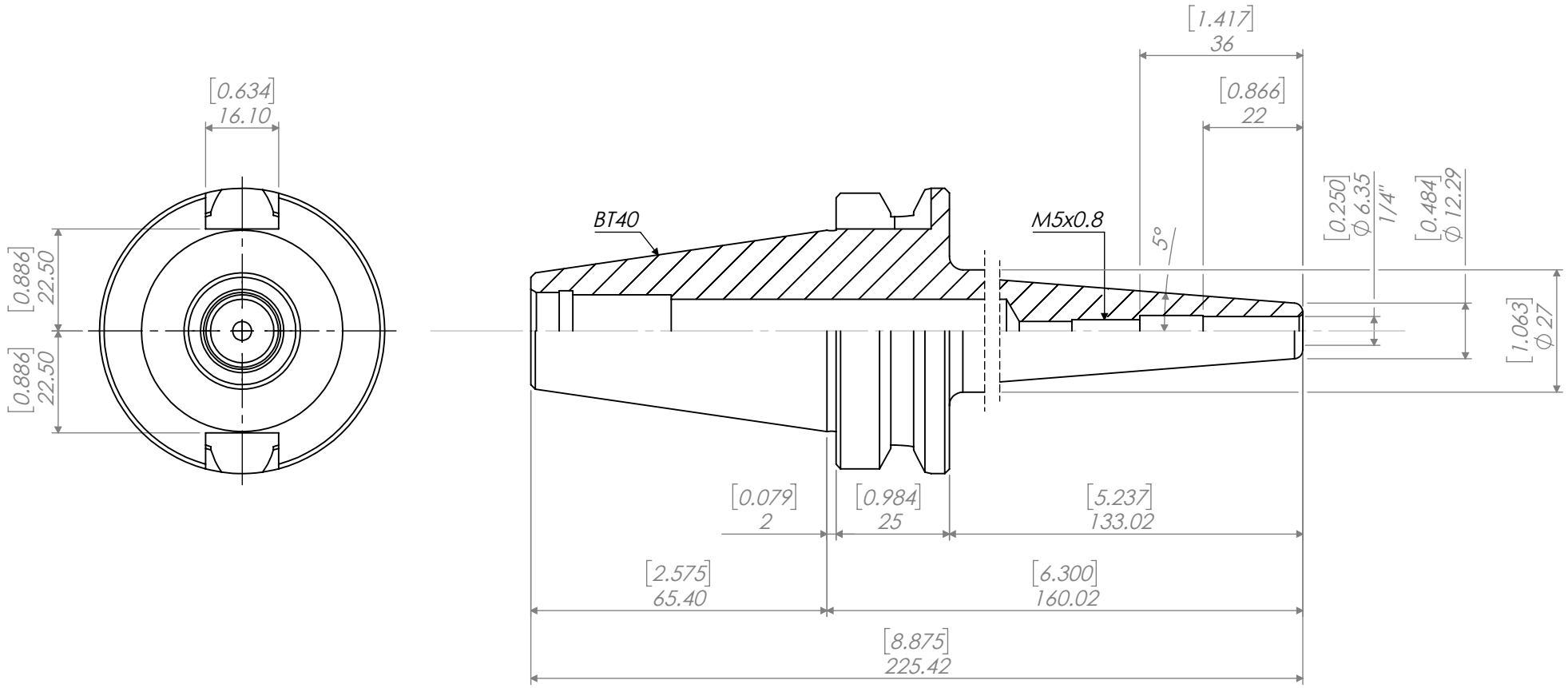


| REVISIONS | | | |
|---|---|---|---|
| REV. | DESCRIPTION | DATE | APPROVED |

NOTES:

BACK-UP SCREW#: M5x0.8

UNLESS OTHERWISE SPECIFIED:

DIMENSIONS ARE IN MM [INCH]

DIMENSIONS ARE FOR REFERENCE ONLY. DRAWING IS SUBJECT TO CHANGE WITHOUT FURTHER NOTICE.

INTERPRET GEOMETRIC TOLERANCING PER: ASME Y 14.5M

THIRD ANGLE PROJECTION

| | NAME | DATE |
|---|---|---|
| DRAWN | AN | 4/2/18 |
| CHECKED | | |
| ENG APPR. | | |
| MFG APPR. | | |
| Q.A. | | |

**PROPRIETARY AND CONFIDENTIAL**

THE INFORMATION CONTAINED IN THIS DRAWING IS THE SOLE PROPERTY OF LYNDEX NIKKEN. ANY REPRODUCTION IN PART OR AS A WHOLE WITHOUT THE WRITTEN PERMISSION OF LYNDEX NIKKEN IS PROHIBITED.

BT40 1/4" SHRINK FIT HOLDER

LYNDEX NIKKEN

| SIZE | DWG. NO. | REV |
|---|---|---|
| A | BT40-SF0250-6.30MT | |
| SCALE: 3/4 | | SHEET 1 OF 1 |

5 4 3 2 1