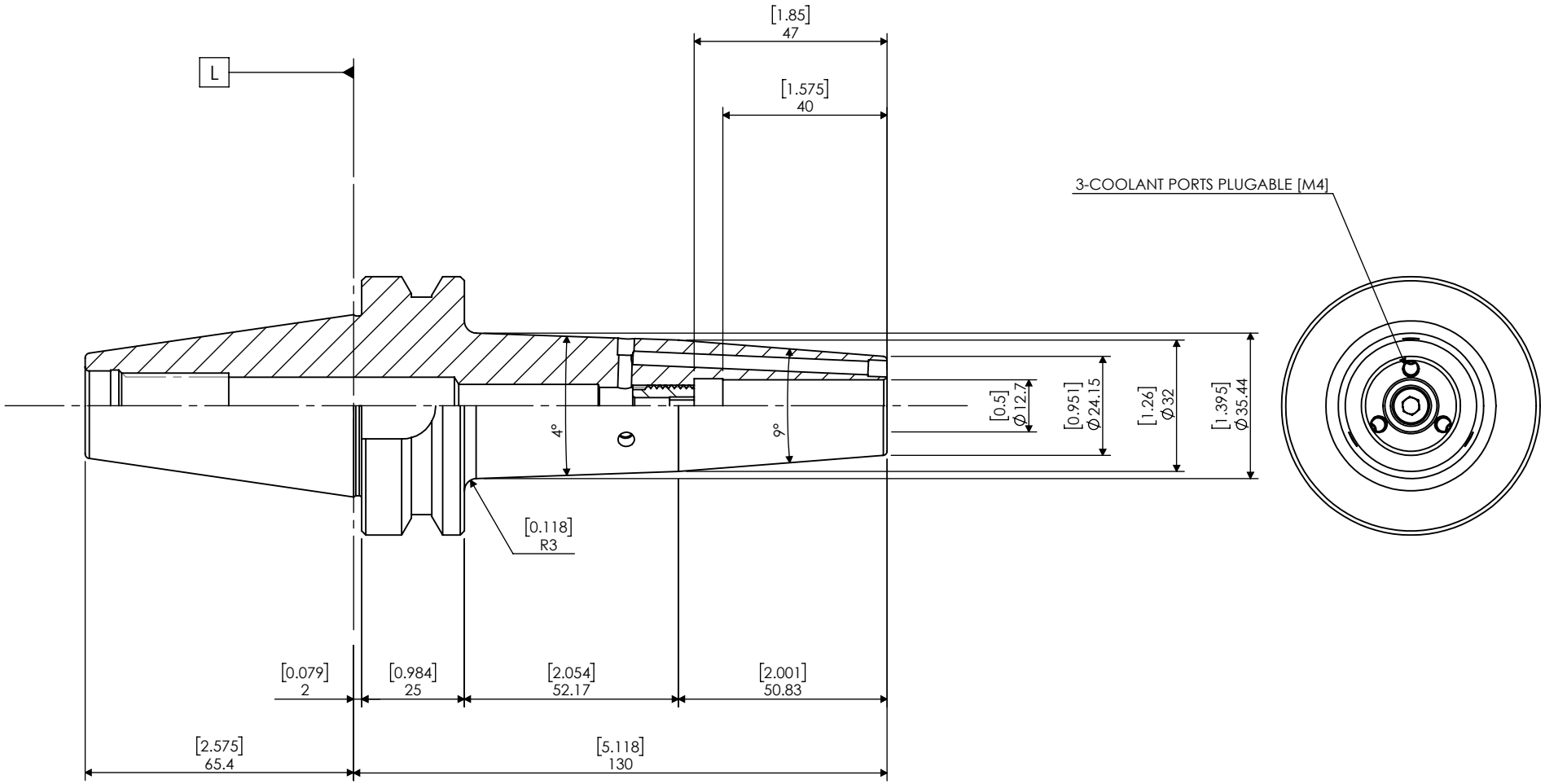

ITEM NO.	PART NUMBER	DESCRIPTION	QTY.
2	SF-STOP-SCREW-12-14	STOP SCREW [M10 P-1.0 L15]	1
1	BT40-SF0500-5.12CP	BT40 SHRINK FIT HOLDER 1/2" COOLANT PORTS	1

PROPRIETARY AND CONFIDENTIAL

THE INFORMATION CONTAINED IN THIS DRAWING IS THE SOLE PROPERTY OF LYNDEX NIKKEN. ANY REPRODUCTION IN PART OR AS A WHOLE WITHOUT THE WRITTEN PERMISSION OF LYNDEX NIKKEN IS PROHIBITED. DRAWING SUBJECT TO CHANGE WITHOUT NOTICE.

	NAME	DATE
DRAWN	BT	4/25/2022

NOTES:

BT40 SHRINK FIT HOLDER 1/2" COOLANT PORTS

LYNDEX NIKKEN

SIZE	DWG. NO.	REV.
A	BT40-SF0500-5.12CP	

SCALE 1:1.5 SHEET 1 OF 1

5 4 3 2 1