NIKKEN KOSAKUSHO WORKS., LTD. All Rights Reserved.

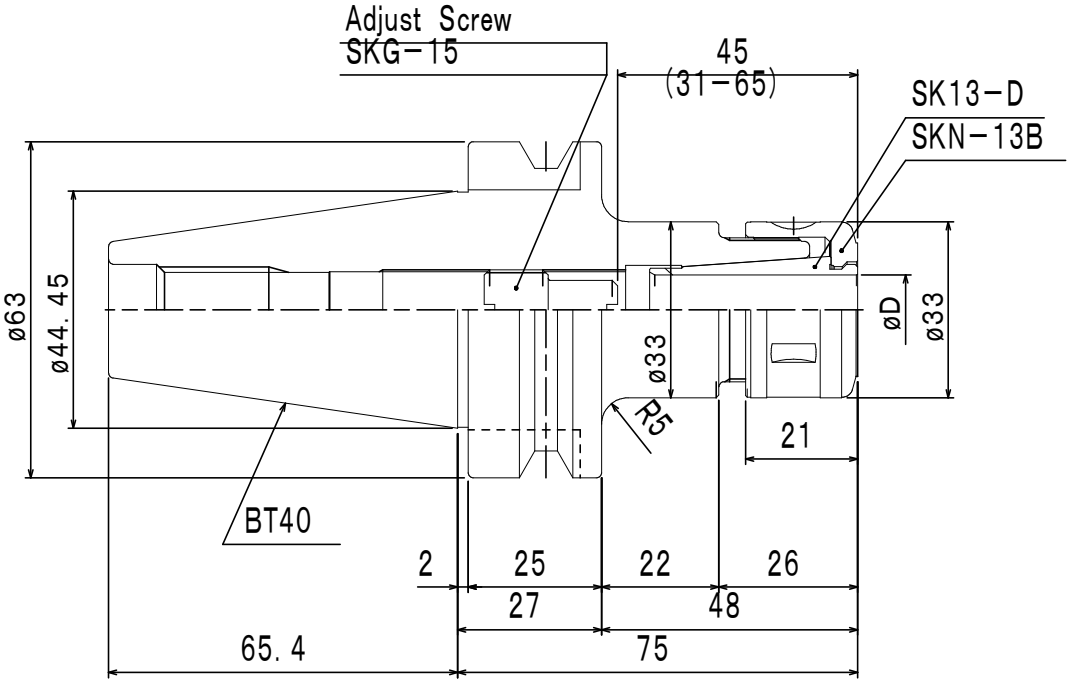

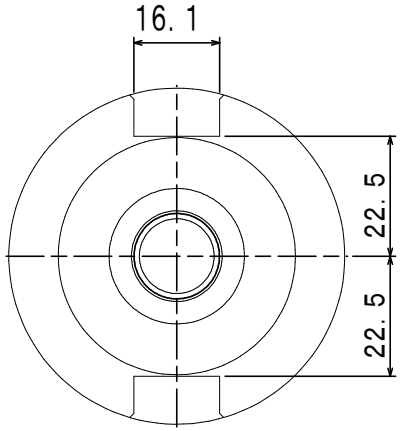

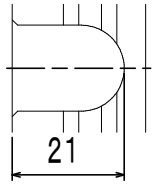

KIND	TITLE	CUSTOMER		
SK13	Slim Chuck			
MACHINE MODEL	CODE NO.	DESIGNED	CHECKED	APPROVED
	BT40-SK13-75	ISOHAMA		
SCALE 1/1	NIKKEN KOSAKUSHO WORKS, LTD.	DIR-NAME	SKA1	
DATE 2007.12.12		DRWG NO.	SKA40-03002/0	