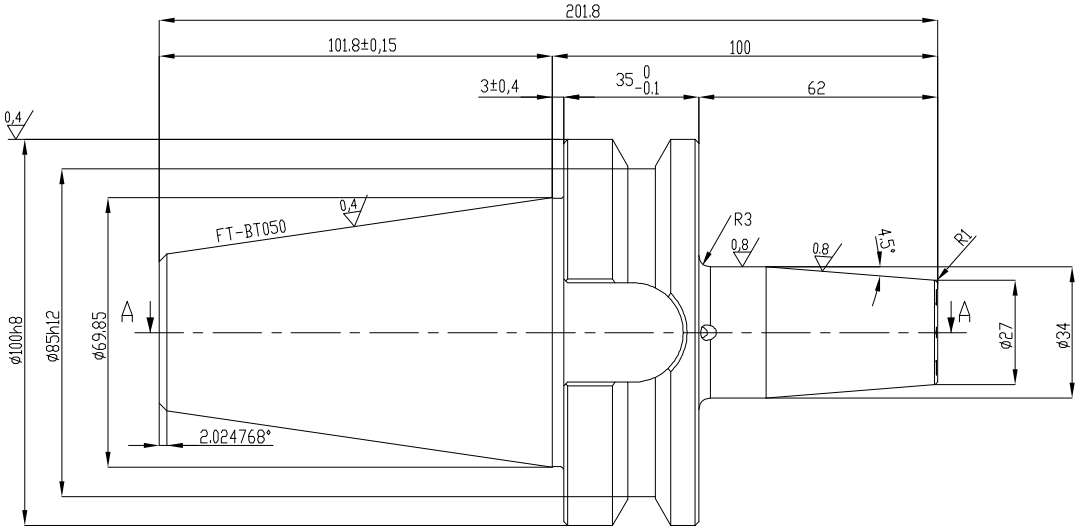

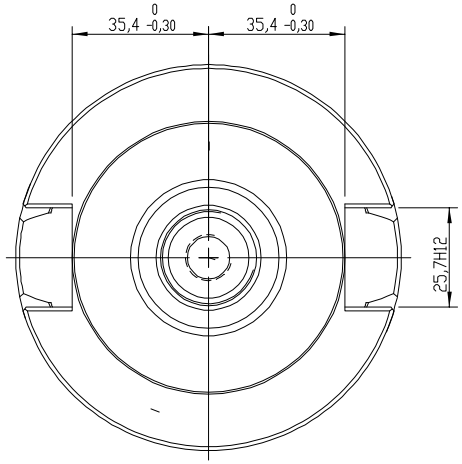

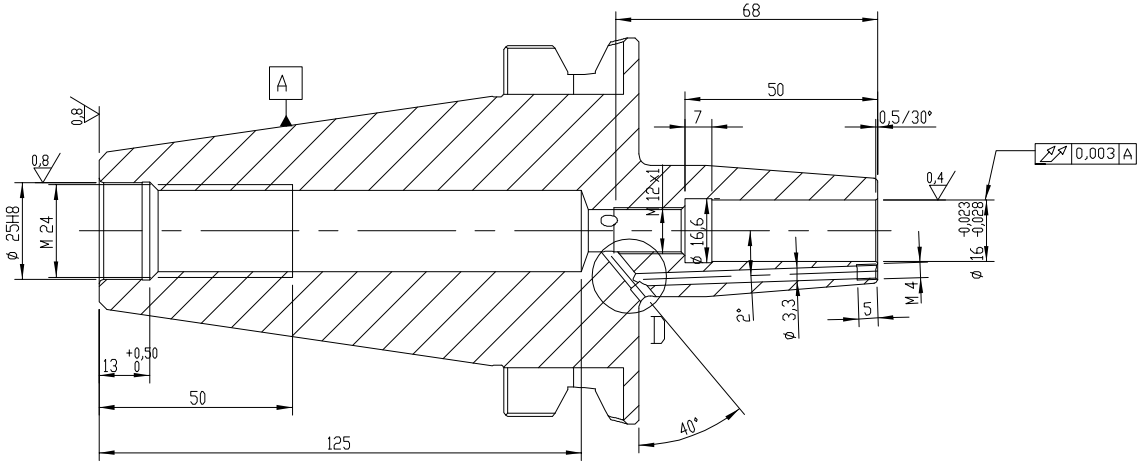

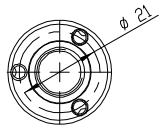

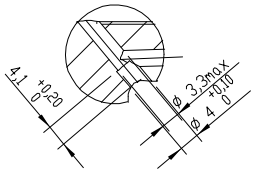

54 - 2 HRc

G2,5/25000

	ITEM		QTY
	XXXXXXX		0
	Back-up screw M12x1x18		1
	BODY	X38CrMoV5-1	1

PROPEITY AND CONFIDENTIAL
THE INFORMATION CONTAINED IN THIS DRAWING IS THE SOLE PROPERTY OF LYNDEX-NIKKEN. ANY REPRODUCTION IN PART, OR AS A WHOLE WITHOUT THE WRITTEN PERMISSION OF LYNDEX-NIKKEN IS PROHIBITED.

Shrink Fit Holder / MAS BT50

ø16 * 100

SCALE				
1/2				

LYNDEX NIKKEN

BT50-SF16-100CP