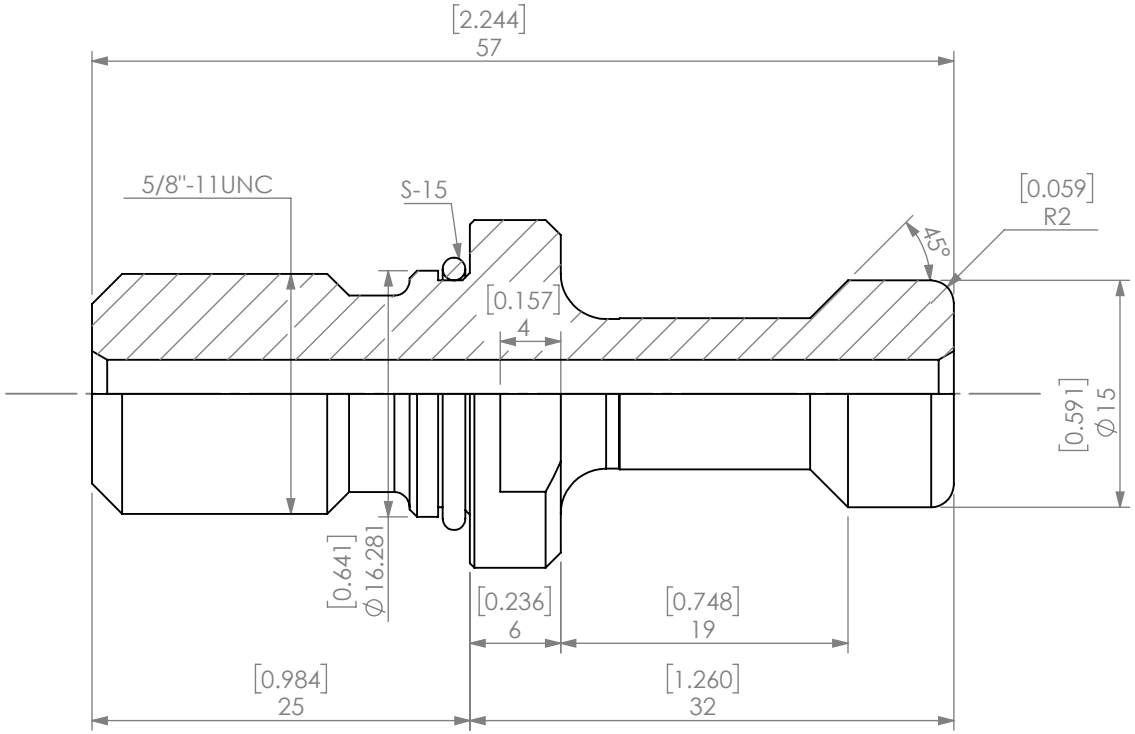

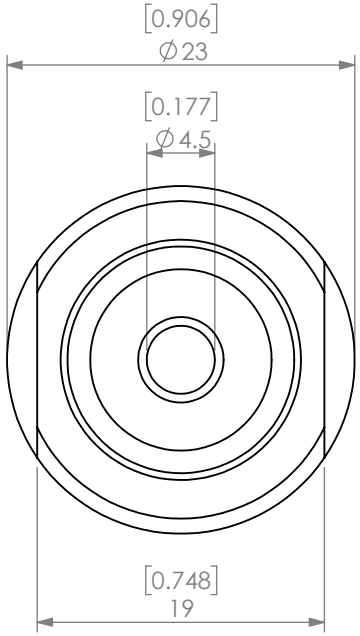

PROPRIETARY AND CONFIDENTIAL

THE INFORMATION CONTAINED IN THIS DRAWING IS THE SOLE PROPERTY OF LYNDEX NIKKEN. ANY REPRODUCTION IN PART OR AS A WHOLE WITHOUT THE WRITTEN PERMISSION OF LYNDEX NIKKEN IS PROHIBITED. DRAWING SUBJECT TO CHANGE WITHOUT NOTICE.

	NAME	DATE
DRAWN	BT	3/24/2021

NOTES:

CAT40 PULL STUD

LYNDEX NIKKEN

SIZE	DWG. NO.	REV.
A	C40-4500(H)GFAC-EU	
SCALE 2:1		SHEET 1 OF 1

5 4 3 2 1