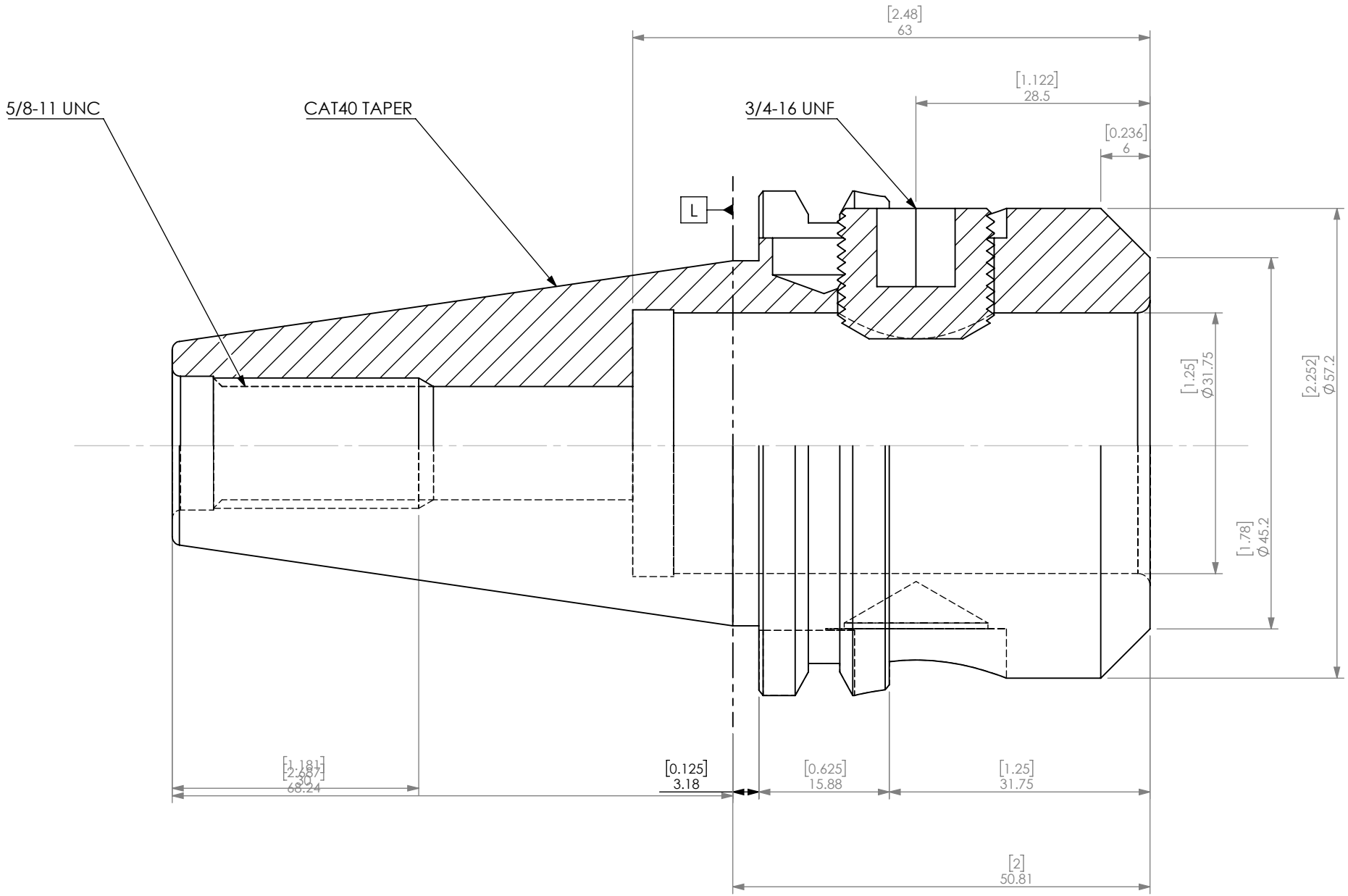

ITEM NO.	PART NUMBER	DESCRIPTION	QTY.
2	S3_4-16X11_16	3/4-16 UNF SET SCREW	1
1	C4006-1250-2.00	CAT40 1 1/4" END MILL HOLDER 2" L	1

PROPRIETARY AND CONFIDENTIAL

THE INFORMATION CONTAINED IN THIS DRAWING IS THE SOLE PROPERTY OF LYNDEX NIKKEN. ANY REPRODUCTION IN PART OR AS A WHOLE WITHOUT THE WRITTEN PERMISSION OF LYNDEX NIKKEN IS PROHIBITED. DRAWING SUBJECT TO CHANGE WITHOUT NOTICE.

	NAME	DATE
DRAWN	SM	1/19/2022

NOTES:

CAT40 1 1/4" END MILL HOLDER 2" L

LYNDEX NIKKEN

SIZE A | DWG. NO. C4006-1250-2.00 | REV.

SCALE 1.5:1 | SHEET 1 OF 1

5 4 3 2 1