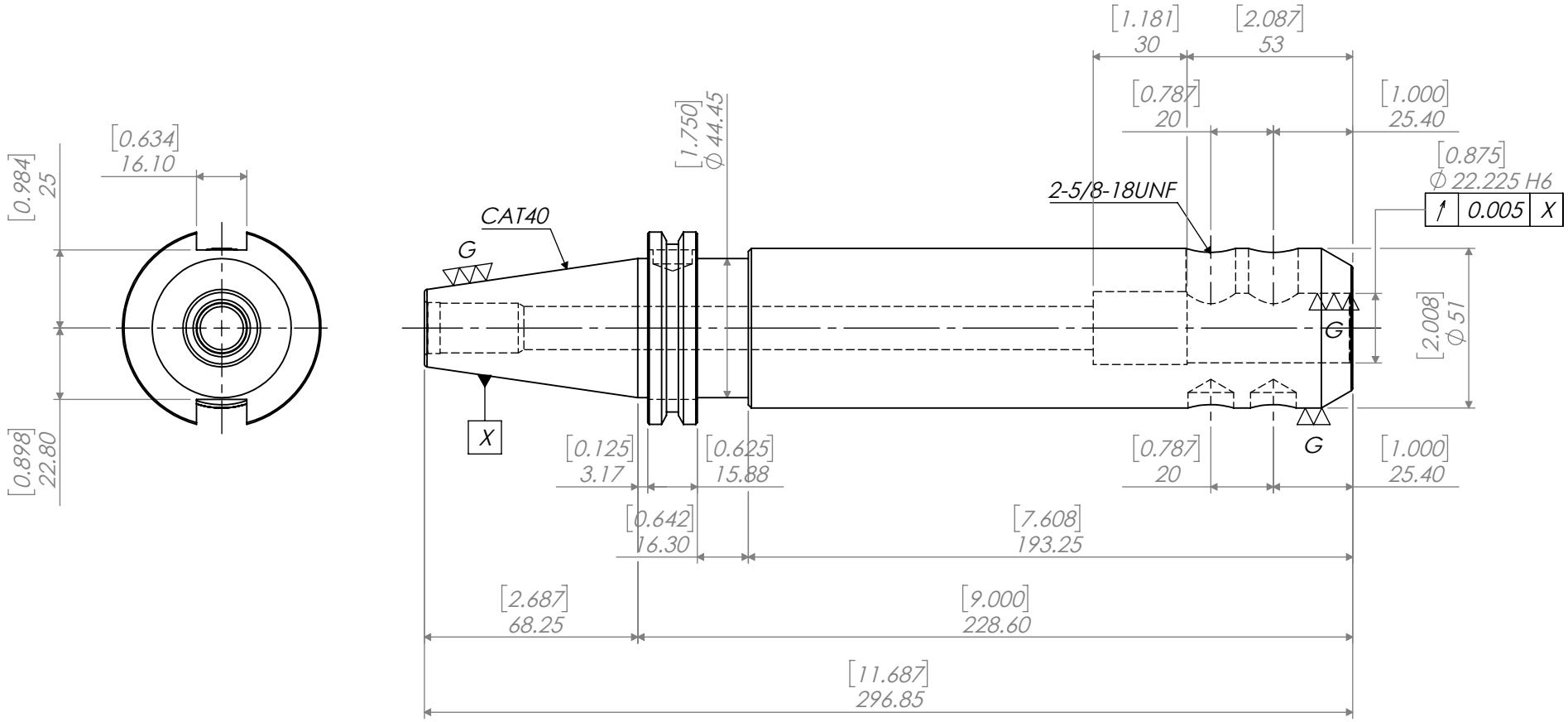

REVISIONS			
REV.	DESCRIPTION	DATE	APPROVED

NOTES:

SCREW#: S5/8-18X1/2 (2)

UNLESS OTHERWISE SPECIFIED:

DIMENSIONS ARE IN MM [INCH]

DIMENSIONS ARE FOR REFERENCE ONLY. DRAWING IS SUBJECT TO CHANGE WITHOUT FURTHER NOTICE.

INTERPRET GEOMETRIC TOLERANCING PER: ASME Y 14.5M

THIRD ANGLE PROJECTION

	NAME	DATE
DRAWN	AN	10/10/18
CHECKED		
ENG APPR.		
MFG APPR.		
Q.A.		

PROPRIETARY AND CONFIDENTIAL

THE INFORMATION CONTAINED IN THIS DRAWING IS THE SOLE PROPERTY OF LYNDEX NIKKEN. ANY REPRODUCTION IN PART OR AS A WHOLE WITHOUT THE WRITTEN PERMISSION OF LYNDEX NIKKEN IS PROHIBITED.

CAT40 Ext Length 7/8" End Mill Holder

LYNDEX NIKKEN

SIZE	DWG. NO.	REV
A	C4046-0875-9.00	

SCALE: 1/2 | SHEET 1 OF 1

5 4 3 2 1