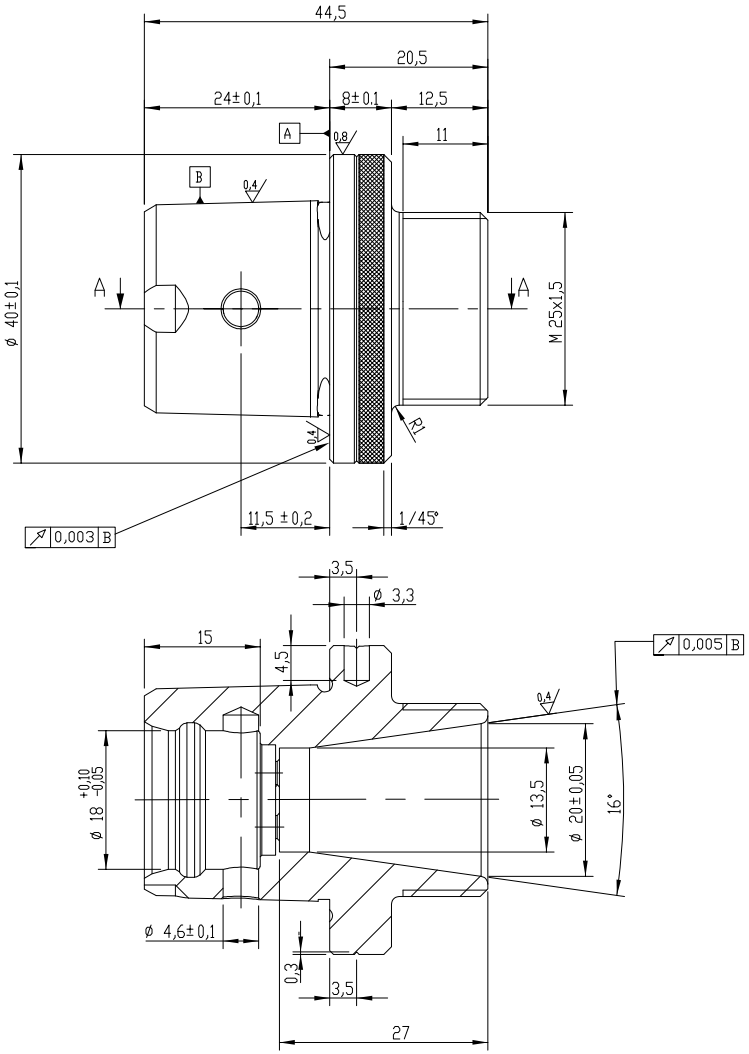

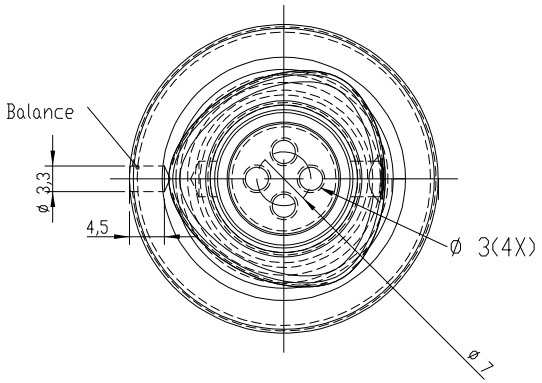

58± HRc

G2,5/25000

	ITEM		QTY
	XXXXXXX		0
	Nut ER20		1
	BODY	16MnCr5	1

PROPEITY AND CONFIDENTIAL
THE INFORMATION CONTAINED IN THIS DRAWING IS THE SOLE PROPERTY OF LYNDEX-NIKKEN. ANY REPRODUCTION IN PART, OR AS A WHOLE WITHOUT THE WRITTEN PERMISSION OF LYNDEX-NIKKEN IS PROHIBITED.

Collet chuck / ISO26623-1

ER20 * 32 short

SCALE				
1/1				

LYNDEX NIKKEN

C4QC.ER20.032