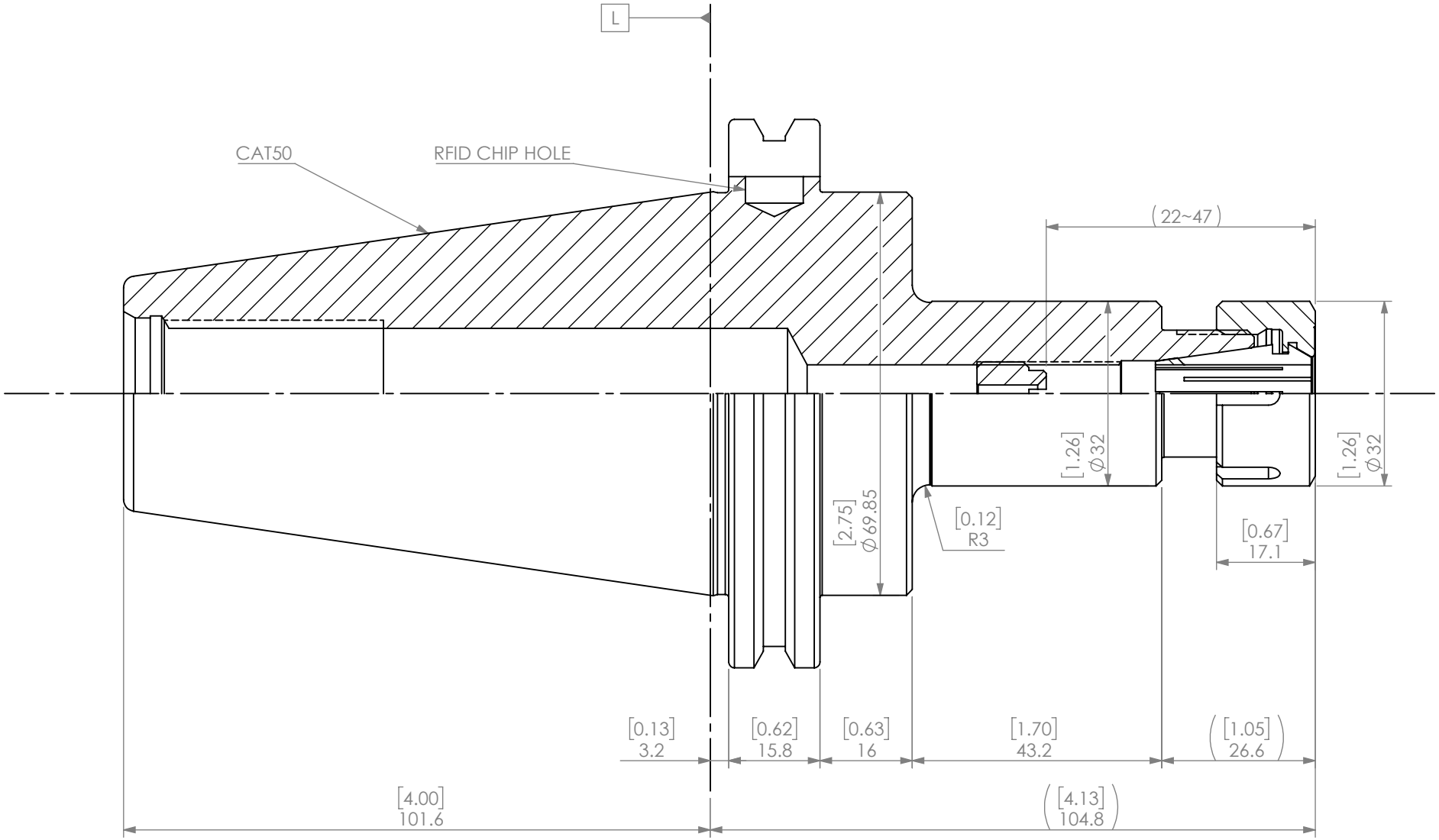

ITEM NO.	PART NUMBER	DESCRIPTION	QTY.
4	E16-XXX	ER16 COLLET [OPTION]	1
3	ER16-SCREW(C)	ER16 BACK UP SCREW [M11-P1.0]	1
2	E16-NUT	ER16 BEARING NUT [M22-P1.5]	1
1	C5007-0016-4.12	CAT50 ER16 COLLET CHUCK W/ID CHIP HOLE	1

PROPRIETARY AND CONFIDENTIAL

THE INFORMATION CONTAINED IN THIS DRAWING IS THE SOLE PROPERTY OF LYNDEX NIKKEN. ANY REPRODUCTION IN PART OR AS A WHOLE WITHOUT THE WRITTEN PERMISSION OF LYNDEX NIKKEN IS PROHIBITED. DRAWING SUBJECT TO CHANGE WITHOUT NOTICE.

	NAME	DATE
DRAWN	AR	5/3/2021

NOTES:

CAT50 ER16 COLLET CHUCK W/ID CHIP HOLE

LYNDEX NIKKEN

SIZE	DWG. NO.	REV.
A	C5007-0016-4.12	
SCALE 1:1		SHEET 1 OF 1

5 4 3 2 1