NIKKEN KOSAKUSHO WORKS., LTD. ALL Rights Reserved

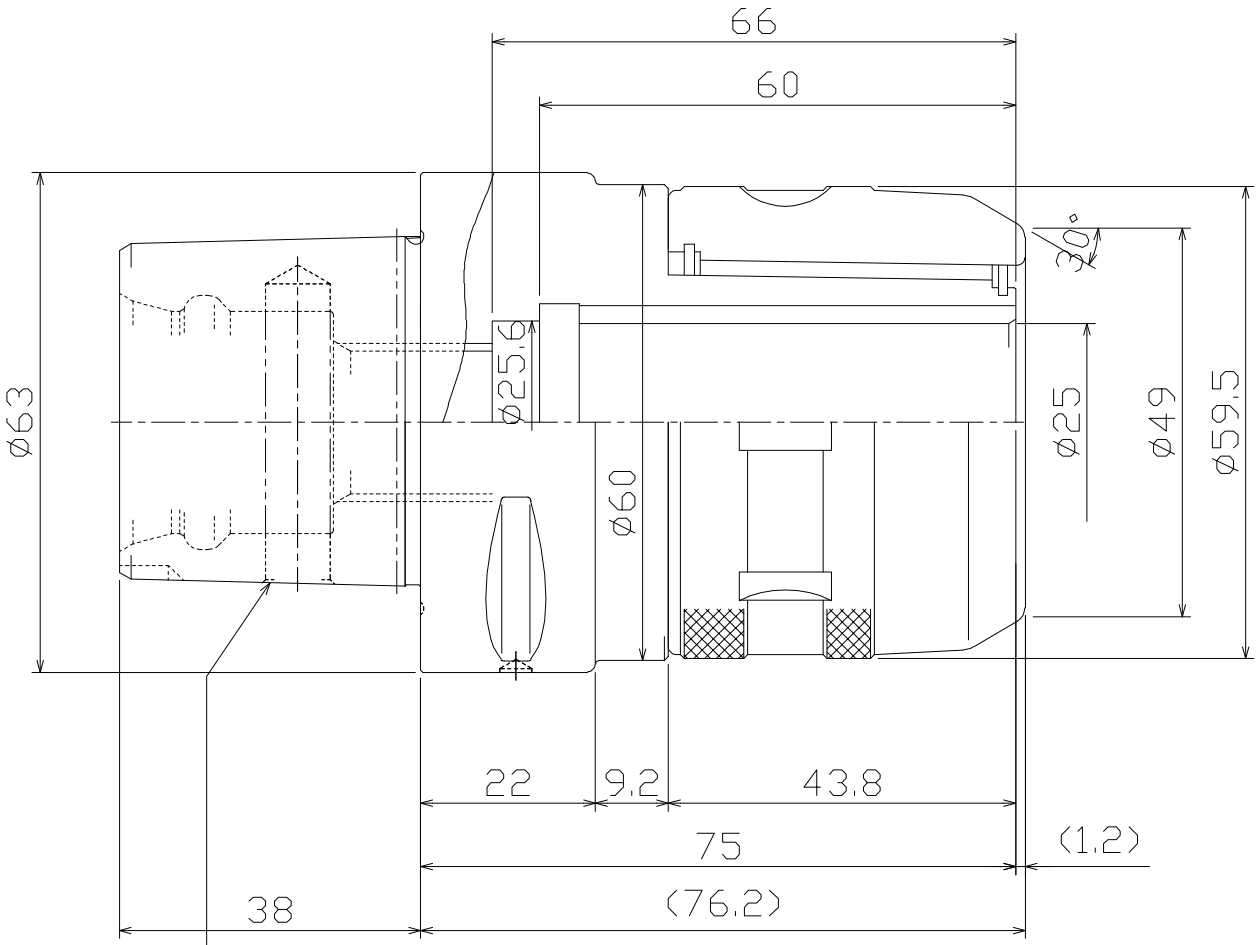

Polygonal taper
C6

NOTE

Spanner:9HC25(Option)

KIND	TITLE	CUSTOMER		
C25SL-3	MILLING CHUCK			
MACHINE MODEL	CODE NO.	DESIGNED	CHECKED	APPROVED
	C6-C25-75	Maemura		
SCALE 1/1	NIKKEN KOSAKUSHO WORKS, LTD.	DIR-NAME	MCA1	
DATE 2014.05.20		DRWG NO.	MCA10-F4001/0	