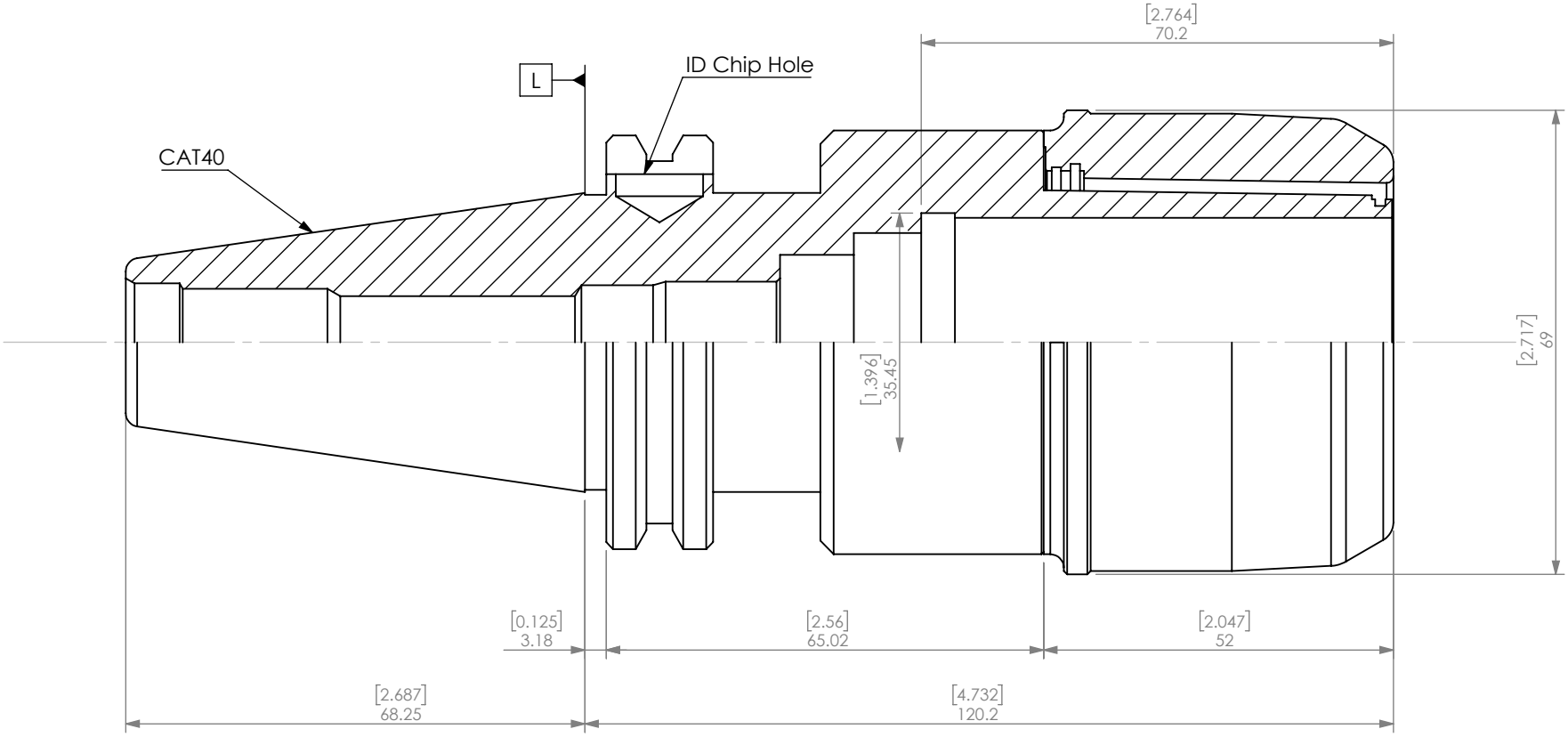

ITEM NO.	PART NUMBER	DESCRIPTION	QTY.
2	CKFN32(1.1_4)	Milling Chuck Nut	1
1	CAT40-C1.1_4SL-120UG	CAT40 1.1/4" Milling Chuck Nose=69 High Speed	1

PROPRIETARY AND CONFIDENTIAL

THE INFORMATION CONTAINED IN THIS DRAWING IS THE SOLE PROPERTY OF LYNDEX NIKKEN. ANY REPRODUCTION IN PART OR AS A WHOLE WITHOUT THE WRITTEN PERMISSION OF LYNDEX NIKKEN IS PROHIBITED. DRAWING SUBJECT TO CHANGE WITHOUT NOTICE.

	NAME	DATE
DRAWN	WN	2/28/2022

NOTES:

CAT40 1.1/4" MILLING CHUCK NOSE=69 HIGH SPEED

LYNDEX NIKKEN

SIZE A | DWG. NO. CAT40-C1.1_4SL-120UG | REV.

SCALE 1:1 | SHEET 1 OF 1

5 4 3 2 1