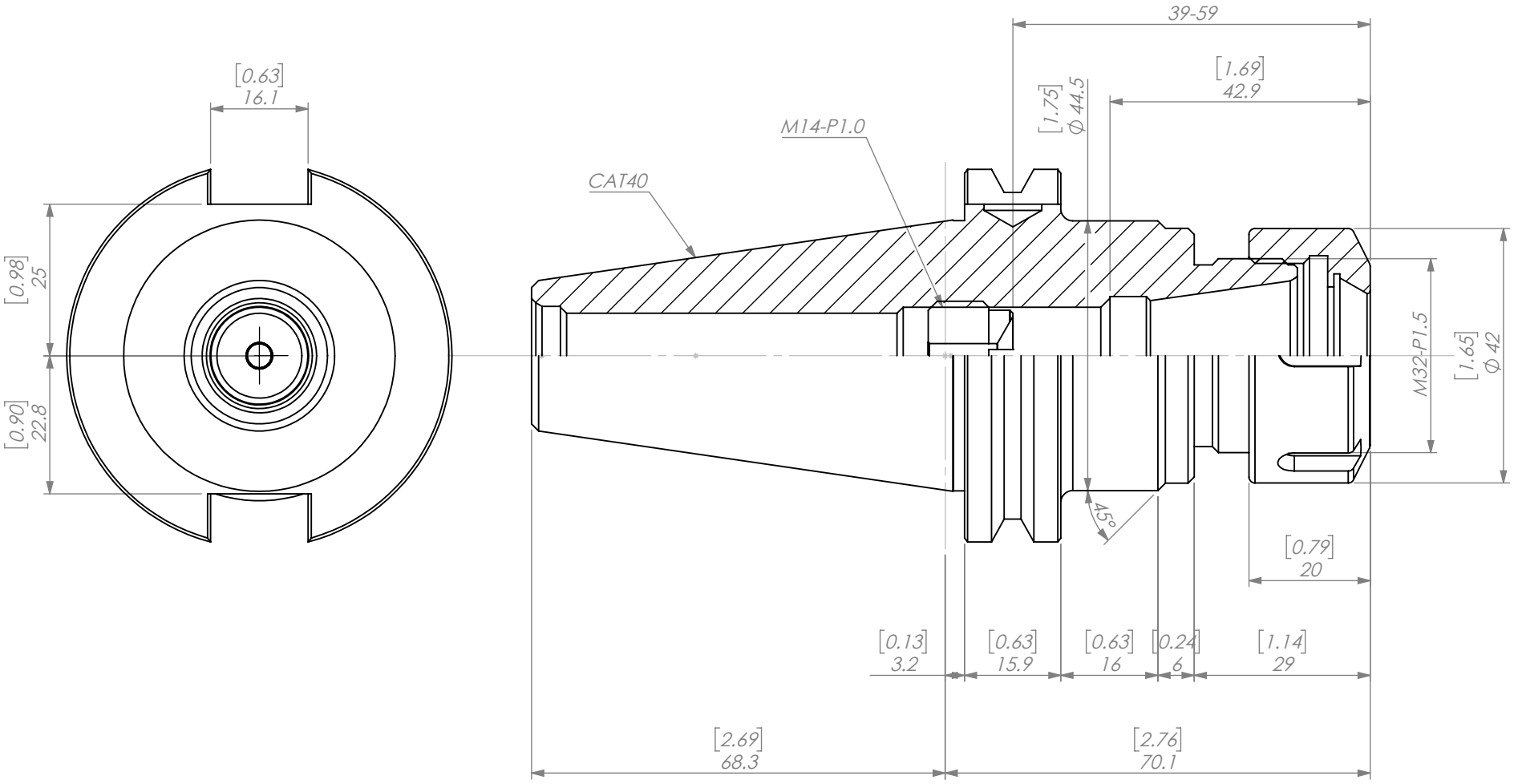

REVISIONS			
REV.	DESCRIPTION	DATE	APPROVED

NOTES:

NUT#:E25-NUT-S

BACK-UP SCREW#: ER25-SCREW(C)

UNLESS OTHERWISE SPECIFIED:

DIMENSIONS ARE IN MM [INCH]

DIMENSIONS ARE FOR REFERENCE ONLY. DRAWING IS SUBJECT TO CHANGE WITHOUT FURTHER NOTICE.

INTERPRET GEOMETRIC TOLERANCING PER: ASME Y 14.5M

THIRD ANGLE PROJECTION

	NAME	DATE
DRAWN	AM	07/24/20
CHECKED		
ENG APPR.		
MFG APPR.		
Q.A.		

PROPRIETARY AND CONFIDENTIAL

THE INFORMATION CONTAINED IN THIS DRAWING IS THE SOLE PROPERTY OF LYNDEX NIKKEN. ANY REPRODUCTION IN PART OR AS A WHOLE WITHOUT THE WRITTEN PERMISSION OF LYNDEX NIKKEN IS PROHIBITED.

CAT40 ER25 COLLET CHUCK (SOLID NUT)

LYNDEX NIKKEN

SIZE	DWG. NO.	REV
A	CAT40-ER25-2.76	

SCALE: 1:1 | SHEET 1 OF 1

5 4 3 2 1