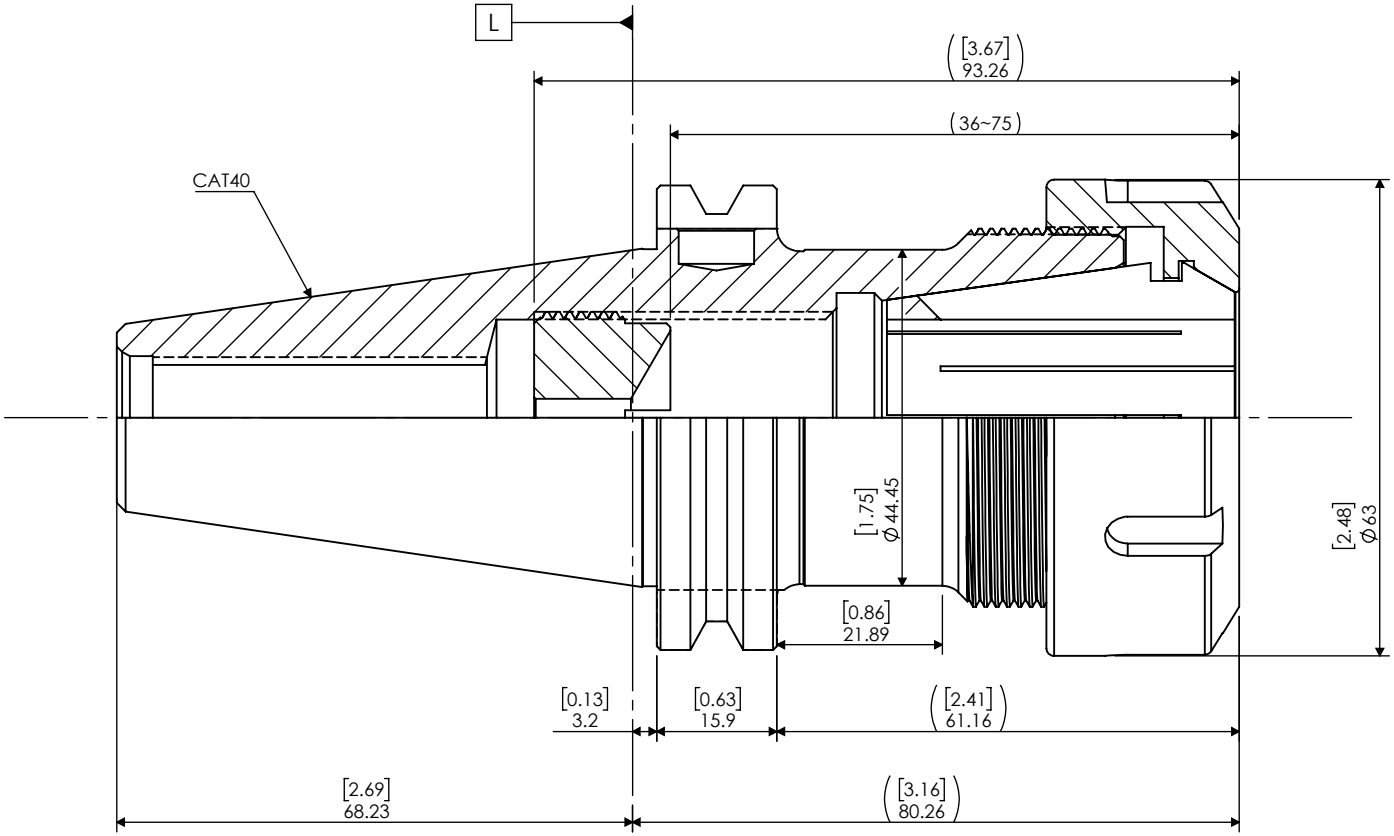

ITEM NO.	PART NUMBER	DESCRIPTION	QTY.
4	E40-XXX	ER40 COLLET [OPTION]	1
3	ER40-SCREW(C)	ER40/ER50 BACK UP SCREW [M28-P1.5]	1
2	E40-NUT-S	ER40 SOLID NUT [M50-P1.5]	1
1	CAT40-ER40-3.15	CAT40 ER40 COLLET CHUCK	1

PROPRIETARY AND CONFIDENTIAL

THE INFORMATION CONTAINED IN THIS DRAWING IS THE SOLE PROPERTY OF LYNDEX NIKKEN. ANY REPRODUCTION IN PART OR AS A WHOLE WITHOUT THE WRITTEN PERMISSION OF LYNDEX NIKKEN IS PROHIBITED. DRAWING SUBJECT TO CHANGE WITHOUT NOTICE.

	NAME	DATE
DRAWN	BT	6/22/2021

NOTES:

CAT40 ER40 COLLET CHUCK

LYNDEX NIKKEN

SIZE	DWG. NO.	REV.
A	CAT40-ER40-3.15	
SCALE 1:1		SHEET 1 OF 1

5 4 3 2 1