Symbol	Date	Rev. by	Notice	Check
△1 × 1	240705	S. C.	IMPROVE	
△2 ×				
△3 ×				
△4 ×				

NIKKEN KOSAKUSHO WORKS., LTD. All Rights Reserved.

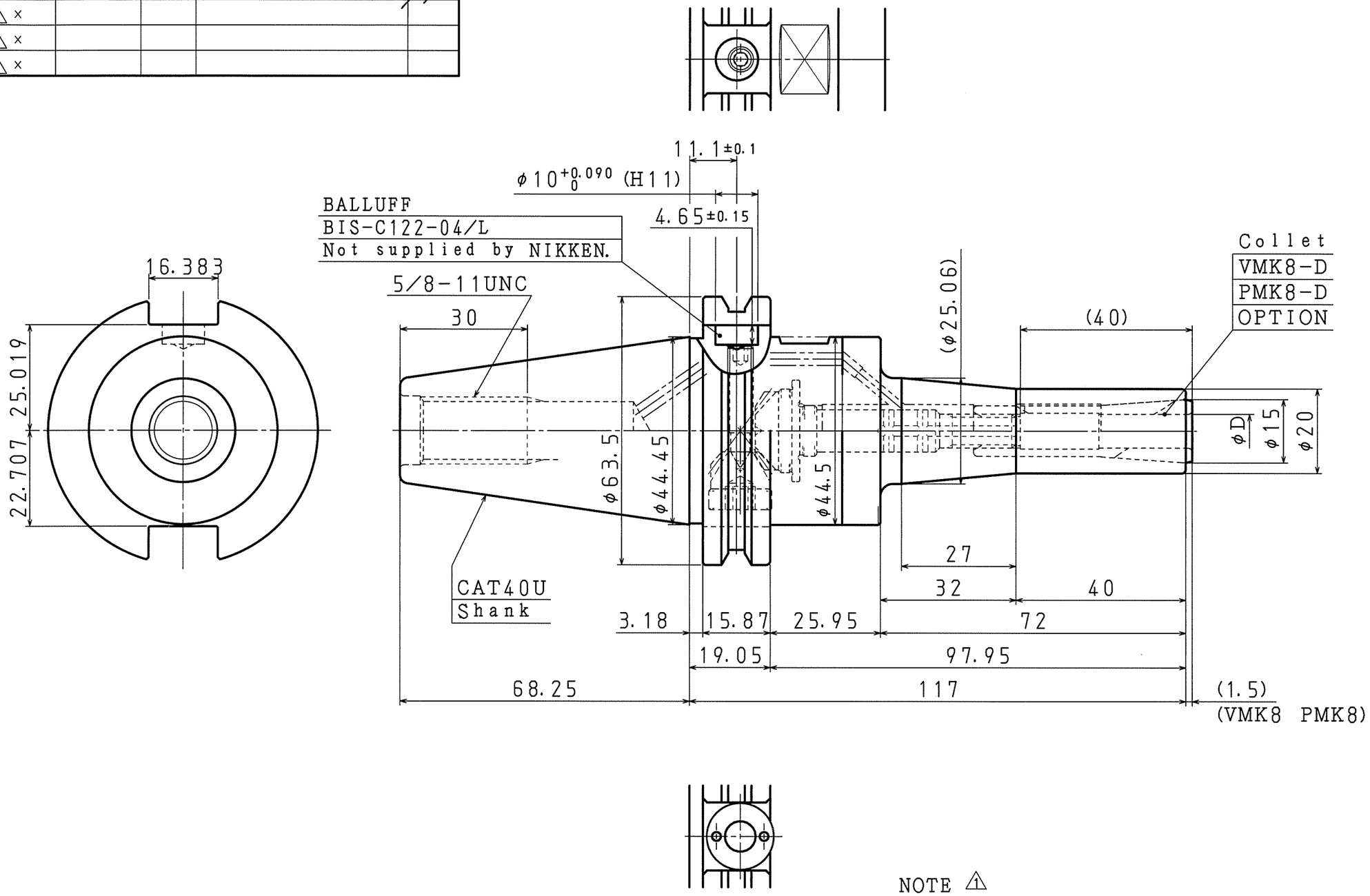

NOTE △1

1995 Collet protrusion changed from 3 mm to 1.5 mm

Effective GL: 118.5mm

NOTE

MAX. 30,000r/min & G2.5

Centre Through MAX. 7MPa

Wrench: EA573KL-6 (Standard)

KIND	TITLE	CUSTOMER		
MMC8	MINI-MINI CHUCK ADVANCED ALPHA			
MACHINE MODEL	CODE NO.	DESIGNED	CHECKED	APPROVED
	CAT40-MMC8C-120U-AA-IDU	S. CHIKAMURA		
SCALE 1:1	NIKKEN KOSAKUSHO WORKS, LTD.	DIR-NAME	MMA1	
DATE 2024.04.15		DRWG NO.	MMA03-10012/1	