Symbol	Date	Rev. by	Notice
1 x			
2 x			
3 x			
4 x			

NIKKEN KOSAKUSHO WORKS., LTD. All Rights Reserved.

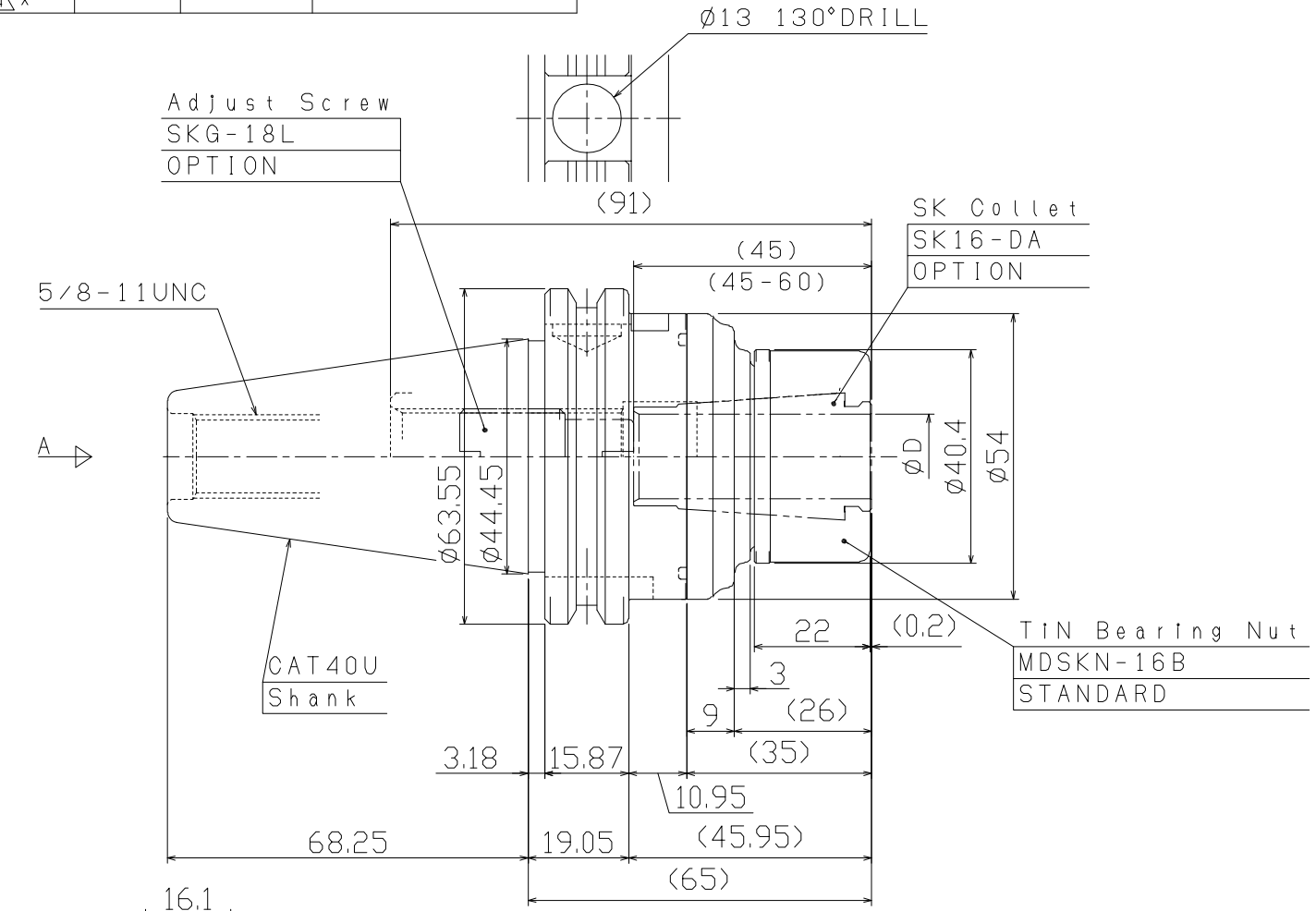

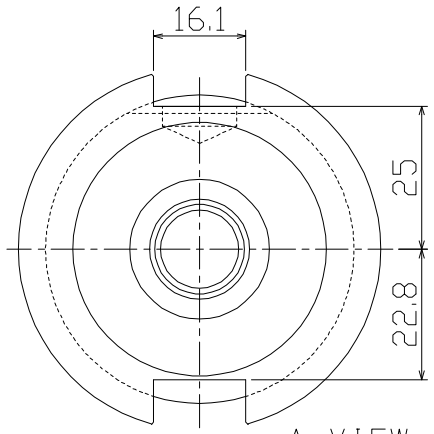

A VIEW

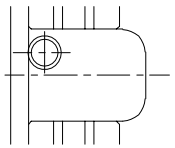

NOTE

Spanner:GH16 (OPTION)

KIND	TITLE	CUSTOMER	
	MAJOR DREAM HOLDER		
MACHINE MODEL	CODE NO.	DESIGNED / CHECKED	APPROVED
	CAT40N-MDSK16-65U	S.CHIKAMURA	
SCALE 1/1	NIKKEN KOSAKUSHO WORKS, LTD.	DIR-NAME	NCK1
DATE 2021.07.30		DRWG NO.	NCK03-10016/0