Symbol	Date	Rev.by	Notice	Check
1 x				
2 x				
3 x				
4 x				

NIKKEN KOSAKUSHO WORKS., LTD. All Rights Reserved.

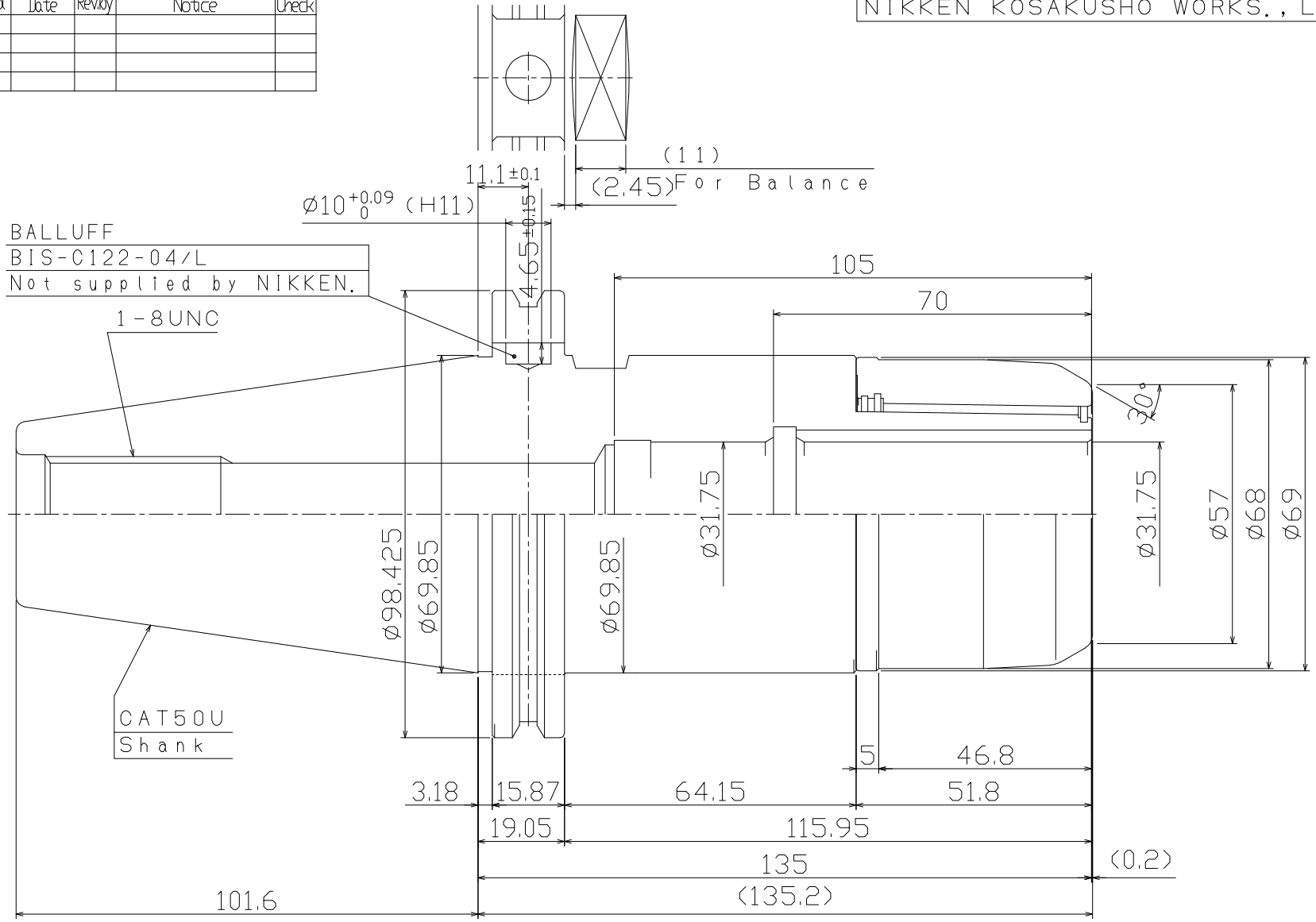

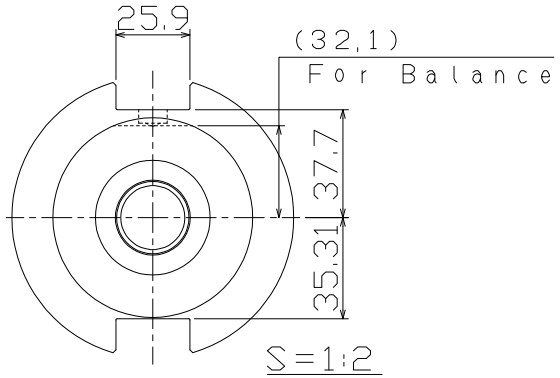

NOTE

MAX. 15,000r/min & G2.5

Center Through:Max.7MPa

GH Handle:GH32 (Option)

KIND C1 1/4SL-3/50	TITLE HIGH SPEED MILLING CHUCK	CUSTOMER		
MACHINE MODEL	CODE NO. CAT50-C1 1/4-135UG-IDU	DESIGNED Isohama	CHECKED	APPROVED
SCALE 1:1	NIKKEN KOSAKUSHO WORKS, LTD.	DIR-NAME	MCA1	
DATE 2022.02.14		DRWG NO.	MCA15-08030/0	