Symbol	Date	Rev.by	Notice	Check
1 x				
2 x				
3 x				
4 x				

NIKKEN KOSAKUSHO WORKS., LTD. All Rights Reserved.

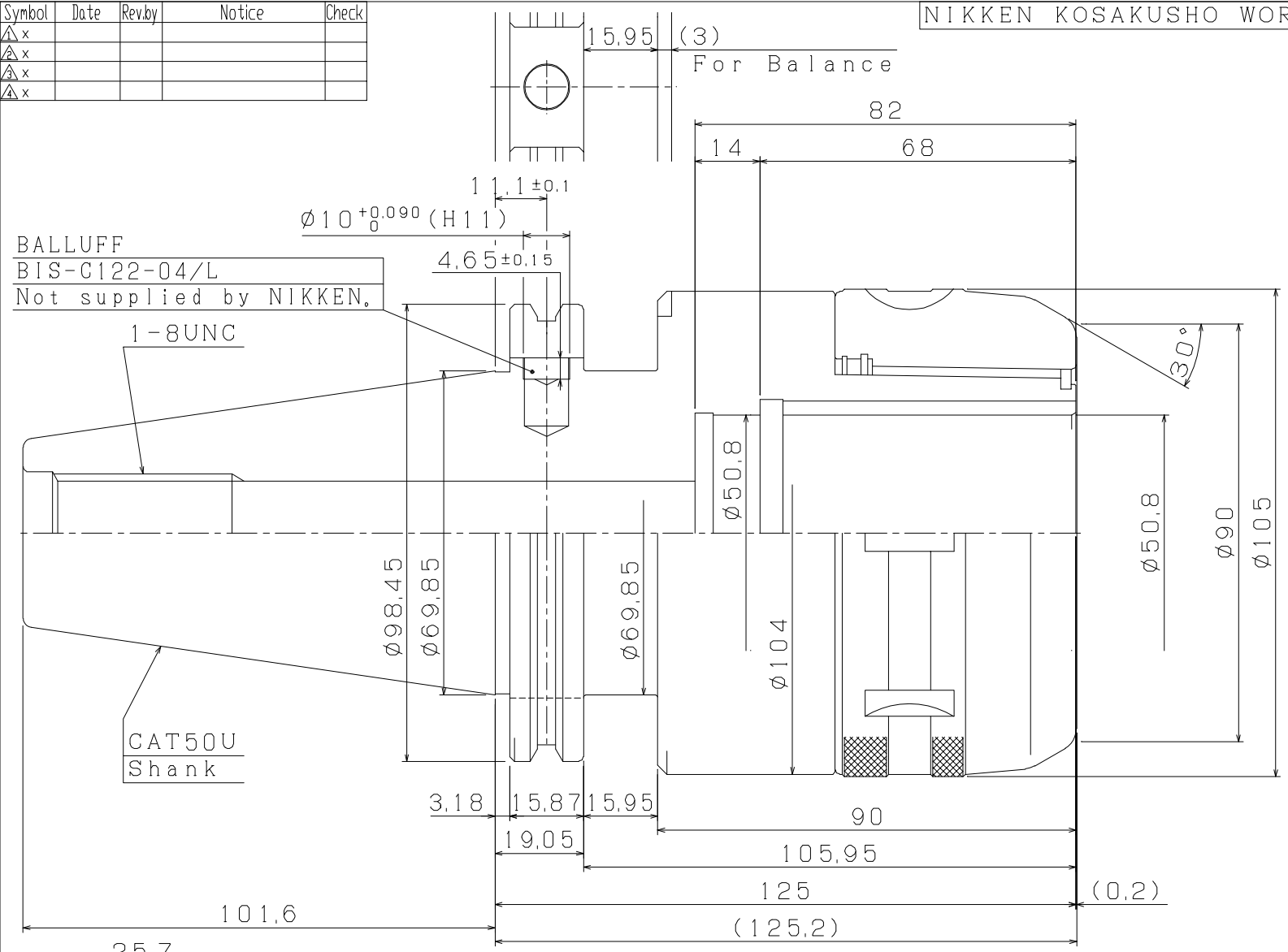

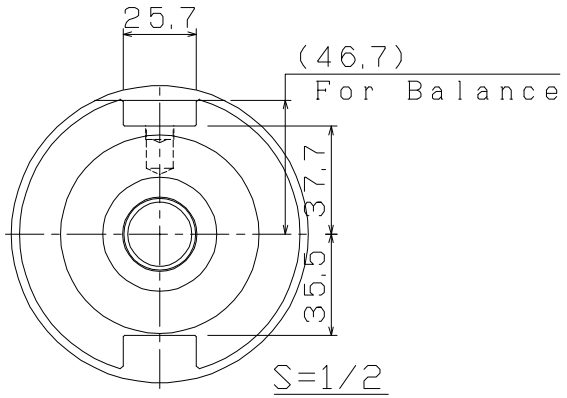

KIND C2SL-1A	TITLE MULTI LOCK MILLING CHUCK	CUSTOMER		
MACHINE MODEL	CODE NO. CAT50-C2-125U-IDU	DESIGNED Isohama	CHECKED	APPROVED
SCALE 1/1	NIKKEN KOSAKUSHO WORKS, LTD.	DIR-NAME	MCA1	
DATE 2017.08.03		DRWG NO.	MCA13-08009/0	