Symbol	Date	Rev.by	Notice	Check
△1	220628	H. K.	ADDITION	
△2				
△3				
△4				

NIKKEN KOSAKUSHO WORKS., LTD. All Rights Reserved.

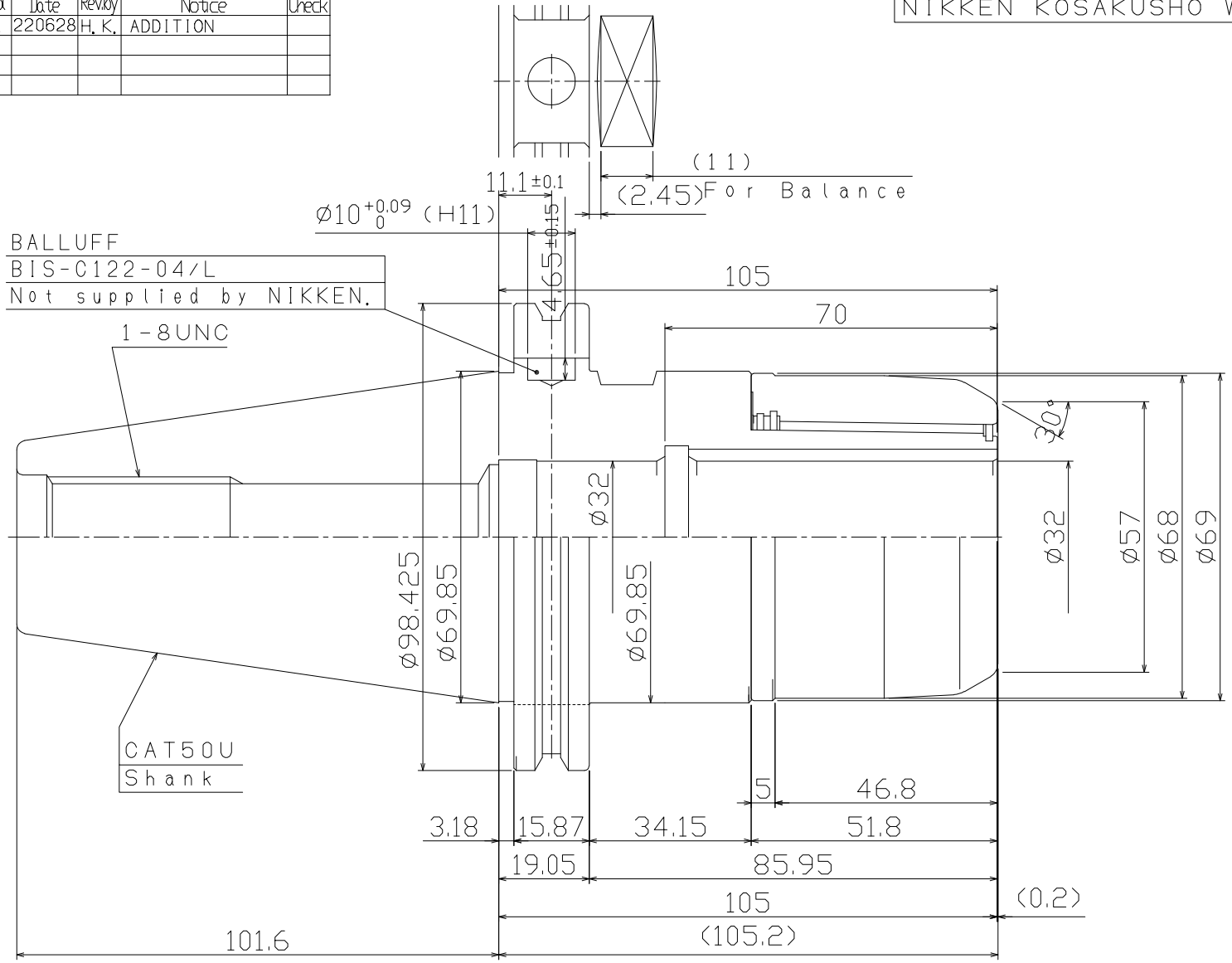

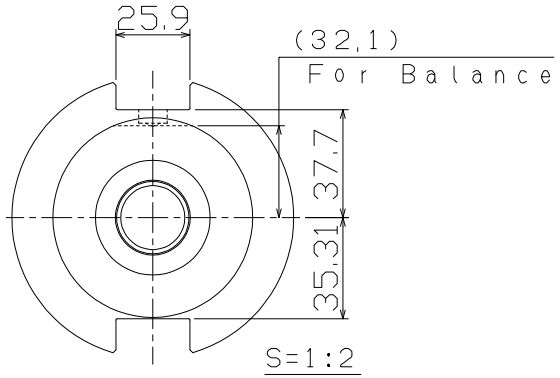

NOTE

Center Through:Max. 7MPa △1

MAX. 15,000r/min & G2.5

GH Handle:GH32 (Option)

KIND	TITLE	CUSTOMER		
C32SL-3	HIGH SPEED MULTI LOCK MILLING CHUCK			
MACHINE MODEL	CODE NO.	DESIGNED	CHECKED	APPROVED
	CAT50-C32-105UG-IDU	Isohama		
SCALE 1:1 (1:2)	NIKKEN KOSAKUSHO WORKS, LTD.	DIR-NAME	MCA1	
DATE 2022.02.14		DRWG NO.	MCA09-08011/1	