Symbol	Date	Rev. by	Notice	Check
△1 × 1	240701	S. C.	IMPROVE	
△2 ×				
△3 ×				
△4 ×				

NIKKEN KOSAKUSHO WORKS., LTD. All Rights Reserved.

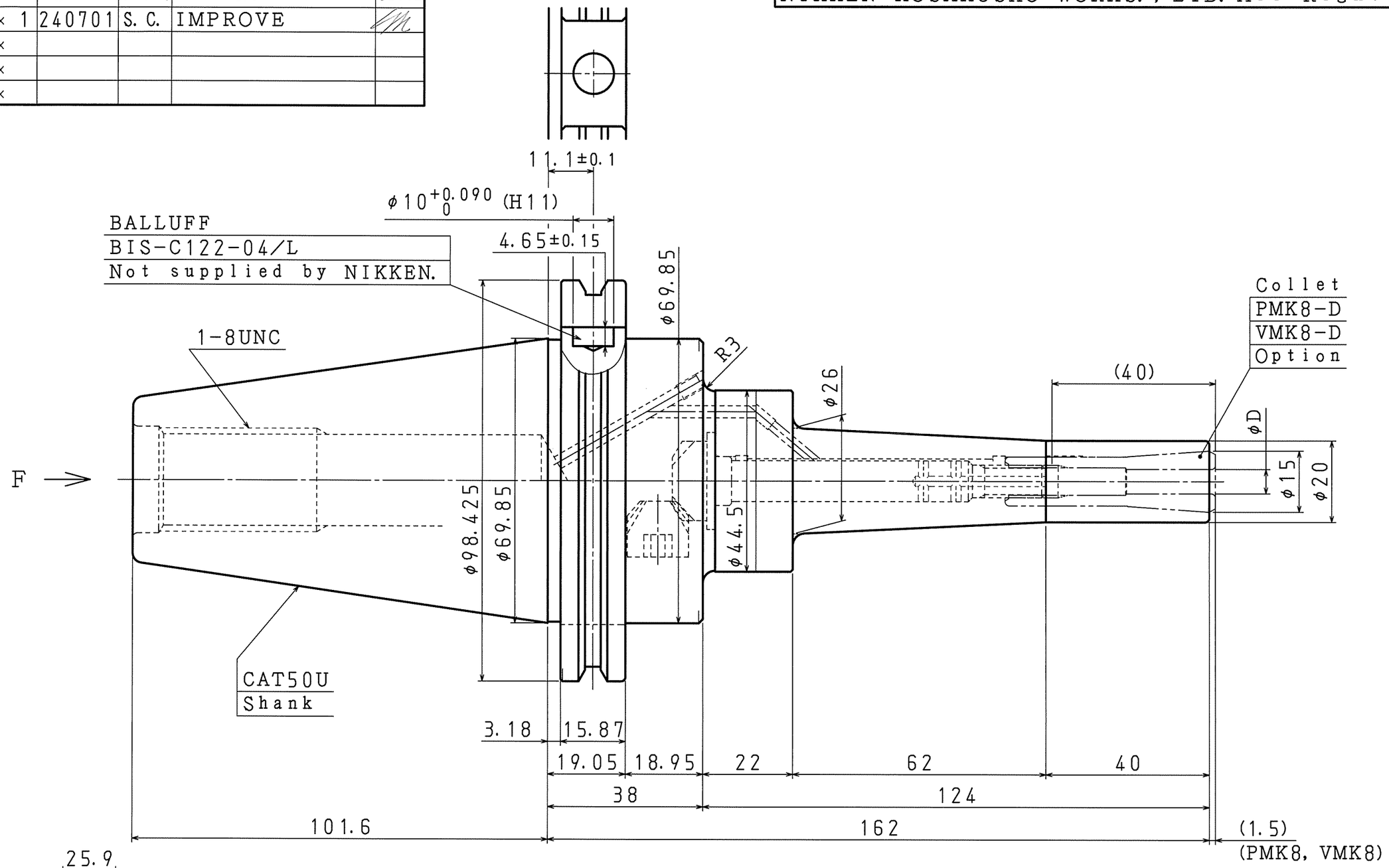

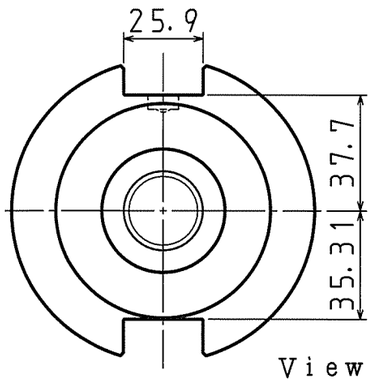

View F (S=1:2)

NOTE

MAX. 20,000r/min & G2.5

Centre Through MAX. 7MPa

Wrench:EA573KL-6 (Standard)

NOTE △1

1995 Collet protrusion changed from 3 mm to 1.5 mm

Effective GL: 163.5mm

KIND: MMC8	TITLE: MINI-MINI CHUCK ADVANCED ALPHA	CUSTOMER		
MACHINE MODEL	CODE NO. CAT50-MMC8C-165U-AA-IDU	DESIGNED: S. CHIKAMURA	CHECKED: Mitsushi	APPROVED
SCALE: 1:1 (1:2)	NIKKEN KOSAKUSHO WORKS, LTD.	DIR-NAME: MMA1		
DATE: 2024.04.25		DRWG NO.: MMA03-08014/1		