Coolant Through	#1	#2	#3	#4
Spindle	remove	remove	X	X
Frange	X	X	remove	remove

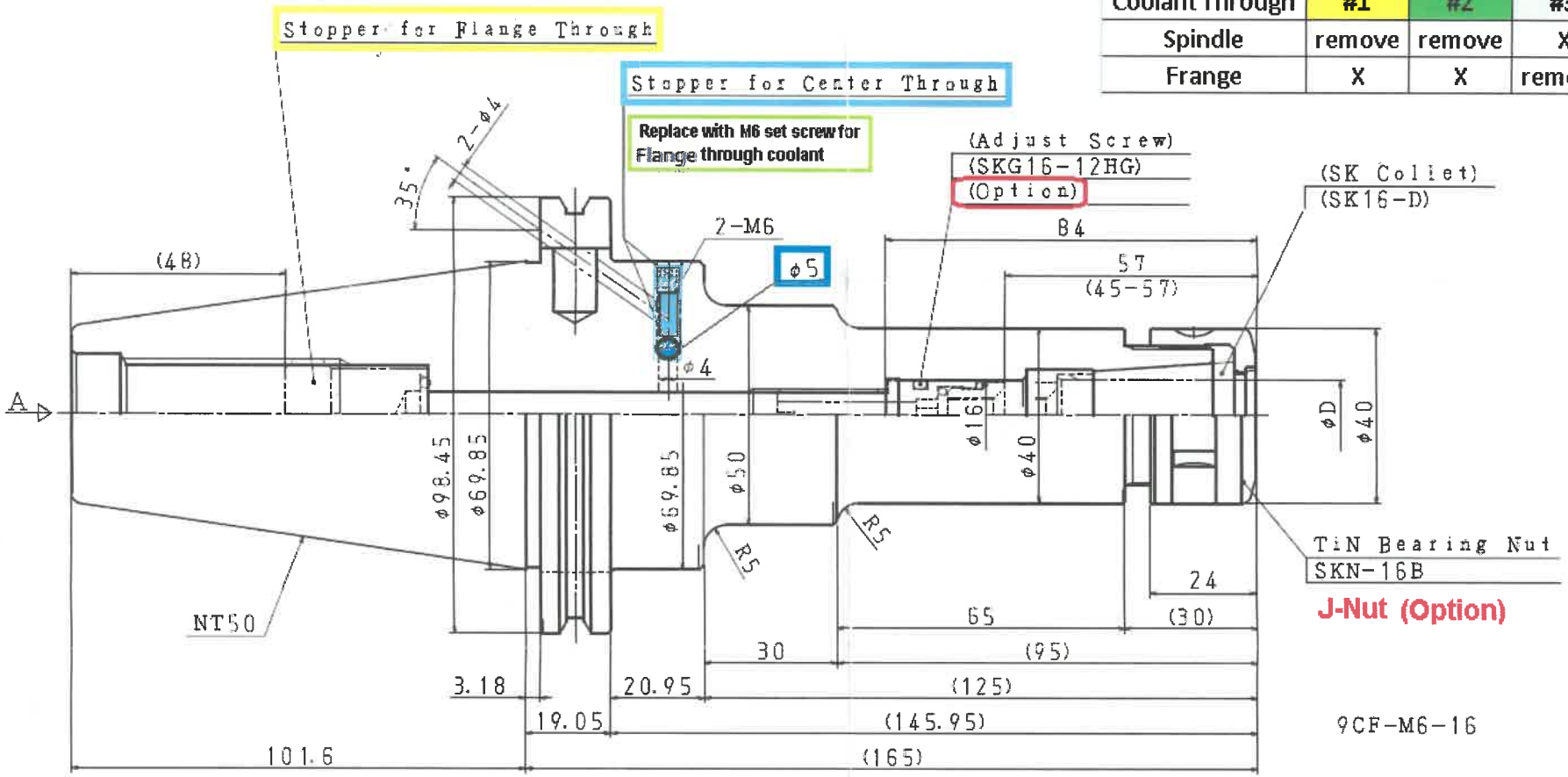

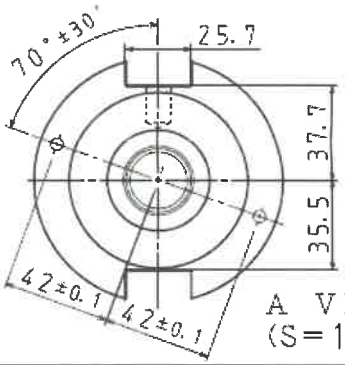

A VIEW
(S=1/2)

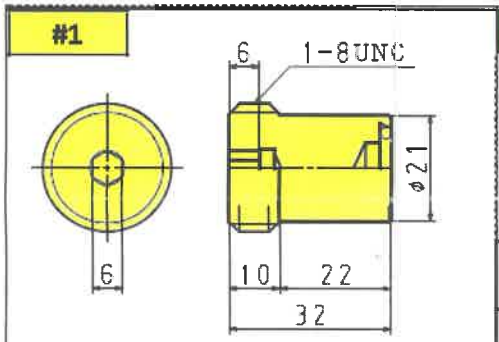

9CF-CAT50U-32L

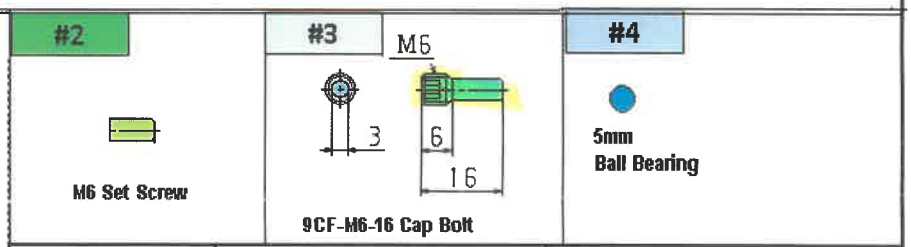

KIND: SK16CF		TITLE: SILM CHUCK		CUSTOMER	
MACHINE MODEL		CODE NO. CAT50-SK16CF-165U		DESIGNED: Maemura	CHECKED / APPROVED
SCALE	1/1 (1/2)	NIKKEN KOSAKUSHO WORKS, LTD.		DIR-NAME	SKA1
DATE	2012. 09. 24			DRWG NO.	SKA10-08004/0