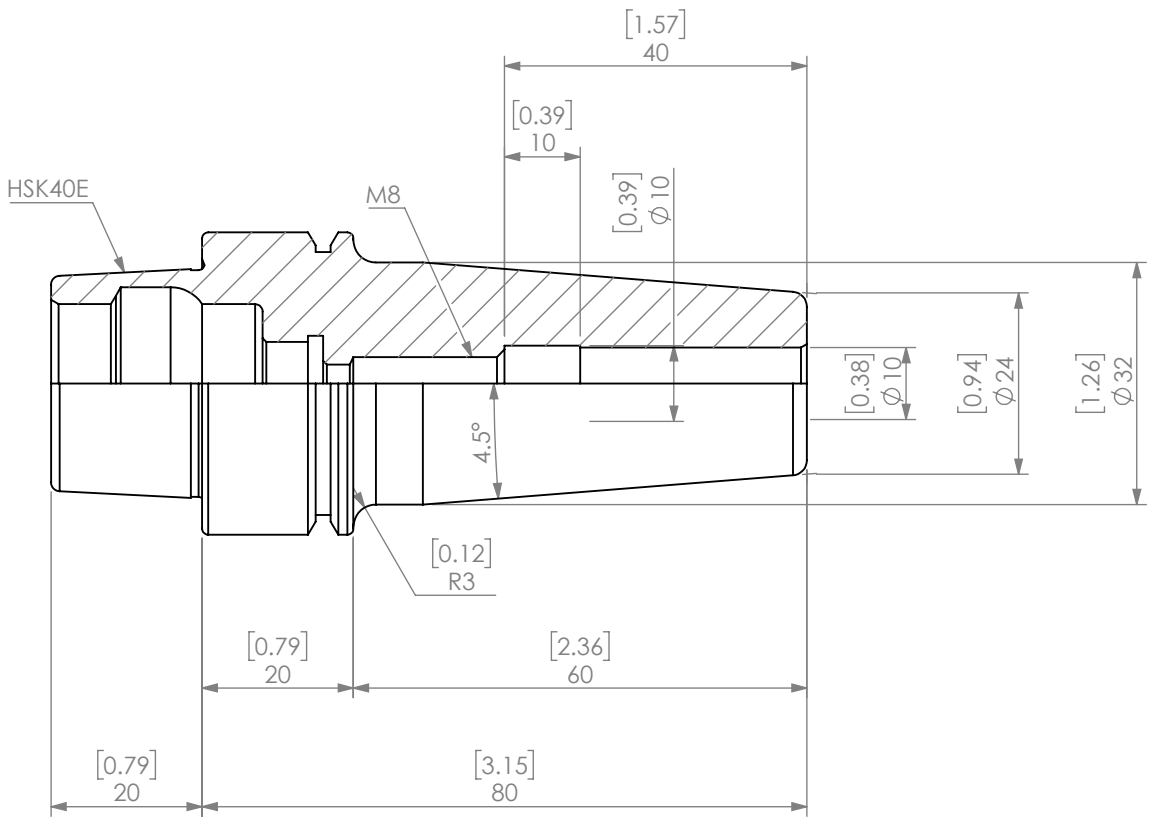

PROPRIETARY AND CONFIDENTIAL

THE INFORMATION CONTAINED IN THIS DRAWING IS THE SOLE PROPERTY OF LYNDEX NIKKEN. ANY REPRODUCTION IN PART OR AS A WHOLE WITHOUT THE WRITTEN PERMISSION OF LYNDEX NIKKEN IS PROHIBITED. DRAWING SUBJECT TO CHANGE WITHOUT NOTICE.

	NAME	DATE
DRAWN	AM	11/30/2020

NOTES:
B/U SCREW#:SF-STOP-SCREW-10

HSK40E 3/8"x3.15" SHRINK FIT HOLDER

LYNDEX NIKKEN

SIZE	DWG. NO.	REV.
A	H40E-SF0375-3.15	
SCALE 1:1		SHEET 1 OF 1

5 4 3 2 1