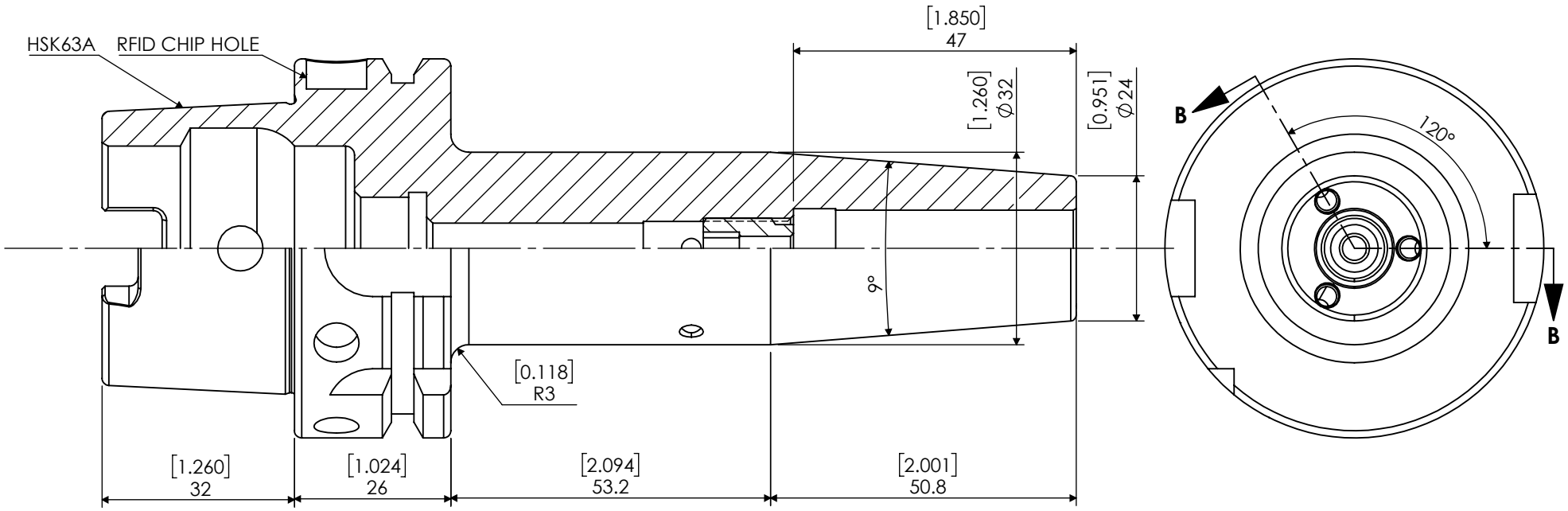

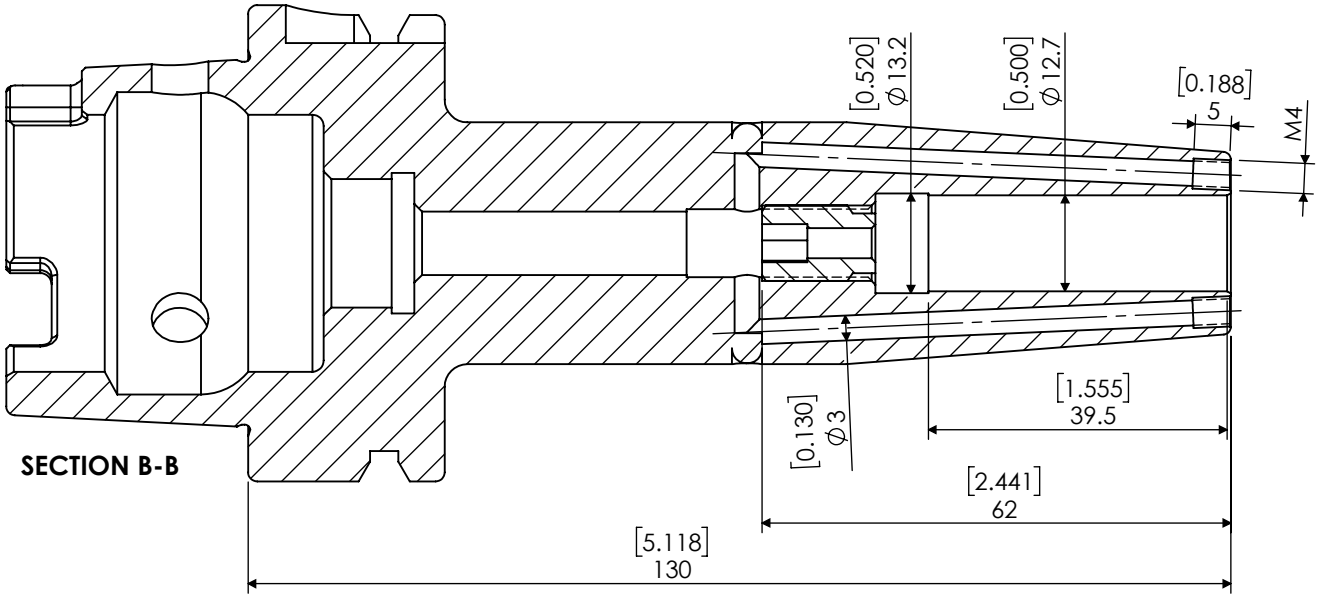

SECTION B-B

PROPRIETARY AND CONFIDENTIAL

THE INFORMATION CONTAINED IN THIS DRAWING IS THE SOLE PROPERTY OF LYNDEX NIKKEN. ANY REPRODUCTION IN PART OR AS A WHOLE WITHOUT THE WRITTEN PERMISSION OF LYNDEX NIKKEN IS PROHIBITED. DRAWING SUBJECT TO CHANGE WITHOUT NOTICE.

	NAME	DATE
DRAWN	BT	5/28/2021

NOTES:

HSK63A 1/2 SHRINK FIT HOLDER C.PORT W/ID CHIP HOLE

LYNDEX NIKKEN

SIZE	DWG. NO.	REV.
A	H63A-SF0500-5.12CP	
SCALE 1:1		SHEET 1 OF 1

5 4 3 2 1