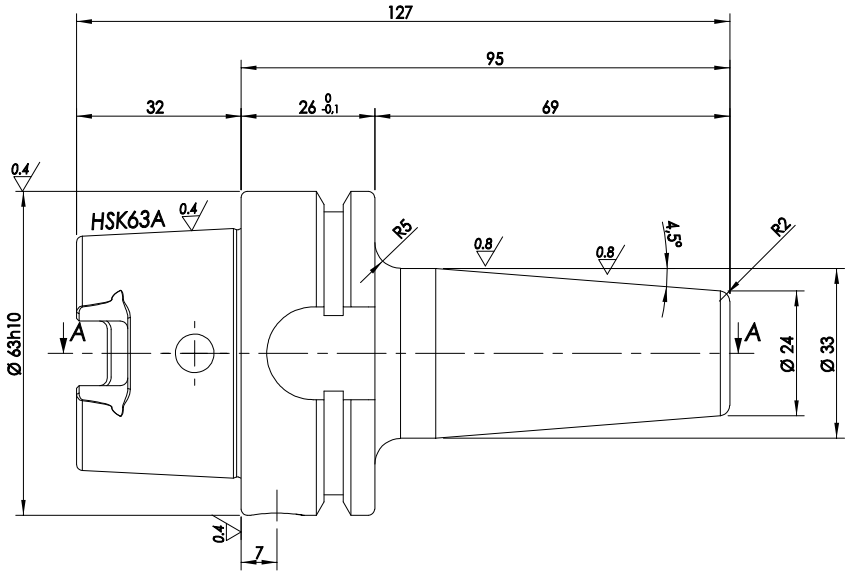

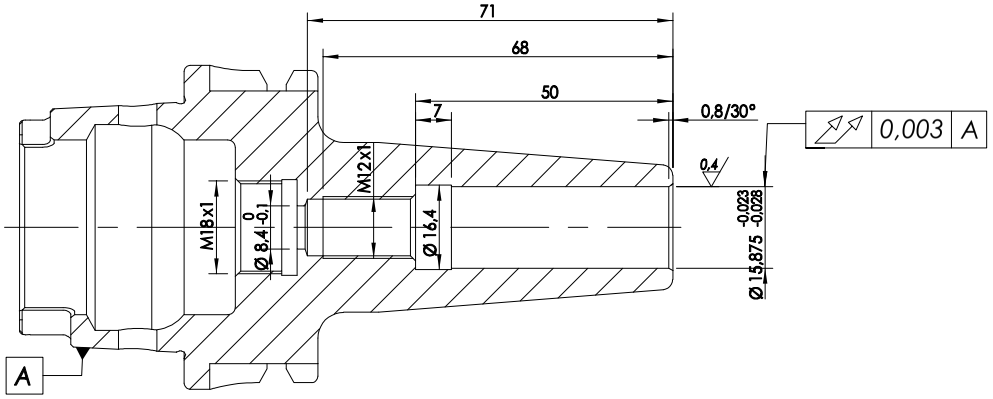

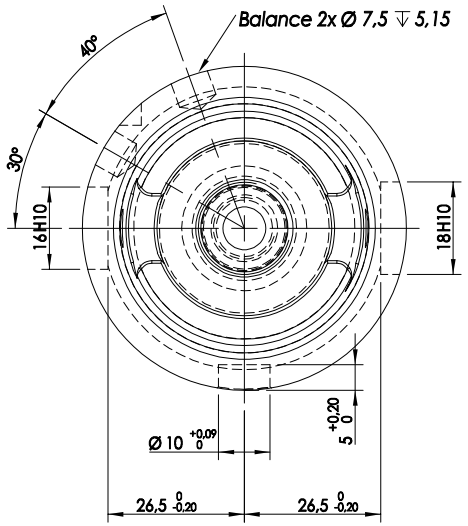

54-2 HRc

G2,5/25000

	ITEM		QTY
	Back-up screw M12x1		1
	BODY	X38CrMoV5-1	1

PROPEITY AND CONFIDENTIAL
THE INFORMATION CONTAINED IN THIS DRAWING IS THE SOLE PROPERTY OF LYNDEX-NIKKEN. ANY REPRODUCTION IN PART, OR AS A WHOLE WITHOUT THE WRITTEN PERMISSION OF LYNDEX-NIKKEN IS PROHIBITED.

Shrink fit holder / HSK 63A

5/8 * 3,74

SCALE				
1/2				

LYNDEX NIKKEN

H63A-SF0625-3.74MT