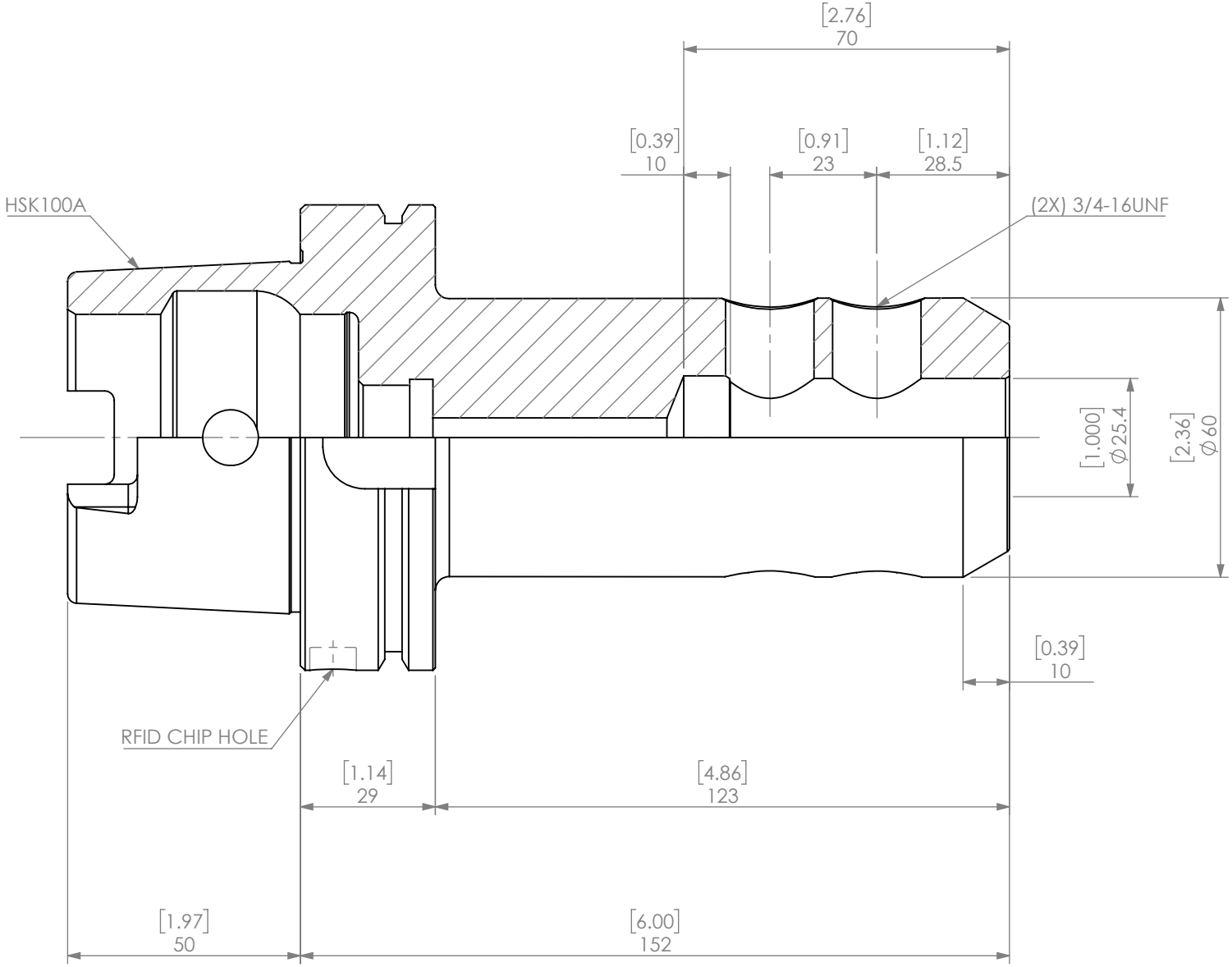

PROPRIETARY AND CONFIDENTIAL

THE INFORMATION CONTAINED IN THIS DRAWING IS THE SOLE PROPERTY OF LYNDEX NIKKEN. ANY REPRODUCTION IN PART OR AS A WHOLE WITHOUT THE WRITTEN PERMISSION OF LYNDEX NIKKEN IS PROHIBITED. DRAWING SUBJECT TO CHANGE WITHOUT NOTICE.

	NAME	DATE
DRAWN	AM	01/19/2021

NOTES:

HSK100A END MILL HOLDER 1"

LYNDEX NIKKEN

SIZE	DWG. NO.	REV.
A	HSK100A-1000-6.00	

SCALE 0.75:1 SHEET 1 OF 1

5 4 3 2 1