Symbol	Date	Rev. by	Notice
1 x			
2 x			
3 x			
4 x			

NIKKEN KOSAKUSHO WORKS., LTD. ALL Rights Reserved

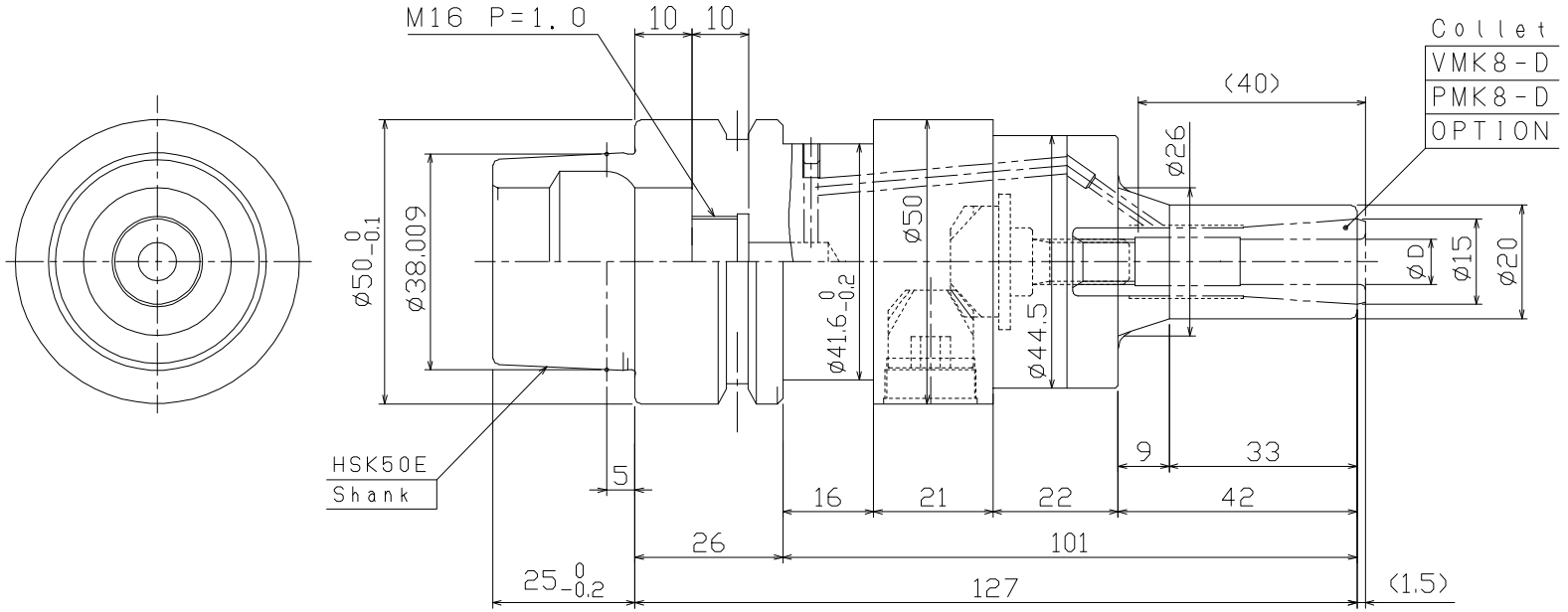

Wrench:EA573KL-6 (STANDARD)
Centre Through MAX. 7MPa
MAX. 30,000min^{-1} & G2.5

KIND	TITLE	CUSTOMER	
MMC8-1	HSK MINI-MINI CHUCK ADVANCED ALPHA		
MACHINE MODEL	CODE NO.	DESIGNED / CHECKED	APPROVED
	HSK50E-MMC8C-127-AA	S. CHIKAMURA	
SCALE 1/1	NIKKEN KOSAKUSHO WORKS, LTD.	DIR-NAME	MMA1
DATE 2021.06.22		DRWG NO.	MMA03-26031/0