Symbol	Date	Rev. by	Notice	Check
1 ×				
2 ×				
3 ×				
4 ×				

NIKKEN KOSAKUSHO WORKS., LTD. All Rights Reserved.

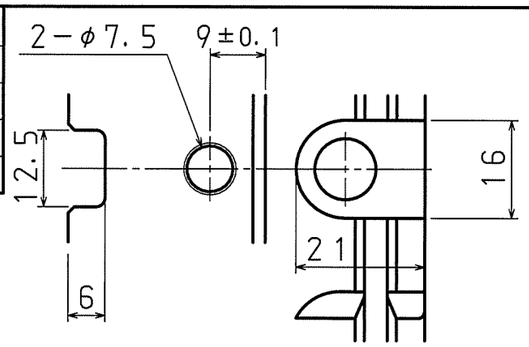

ID MAKER
BALLUFF BIS C-122-04/L
Not supplied by NIKKEN.

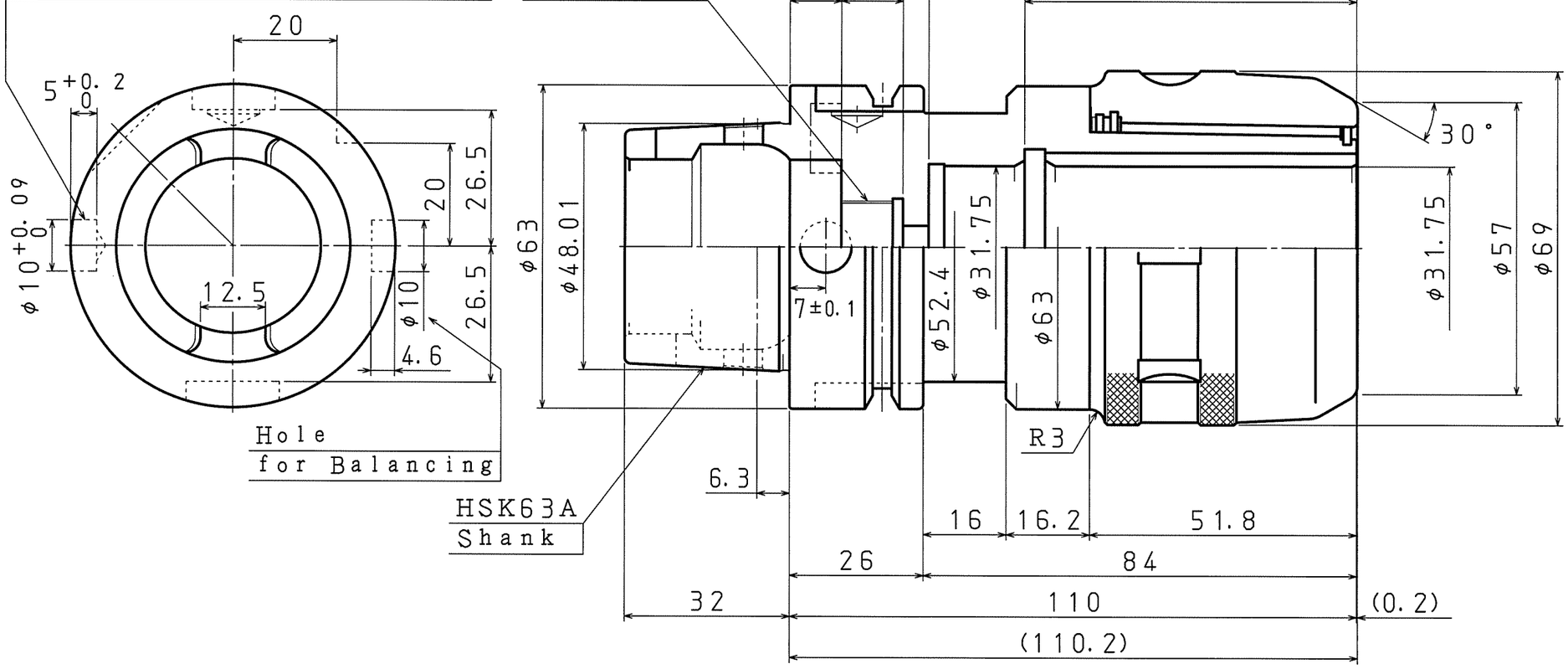

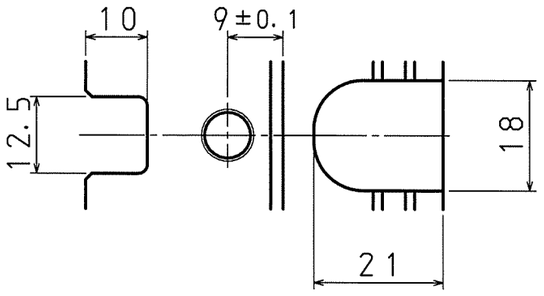

NOTE
Center Through:Max.7MPa
Spanner:9HC32 (Option)

KIND	TITLE	CUSTOMER		
C1 1/4SL-3/40	MULTI-LOCK MILLING CHUCK			
MACHINE MODEL	CODE NO.	DESIGNED	CHECKED	APPROVED
	HSK63A-C1 1/4-110-IDU	ISOHAMA	Kajimiya	
SCALE 1:1	NIKKEN KOSAKUSHO WORKS, LTD.	DIR-NAME	MCA1	
DATE 2022. 10. 12		DRWG NO.	MCA45-26004/0	