Symbol	Date	Rev. by	Notice	Check
1 x				
2 x				
3 x				
4 x				

NIKKEN KOSAKUSHO WORKS., LTD. All Rights Reserved.

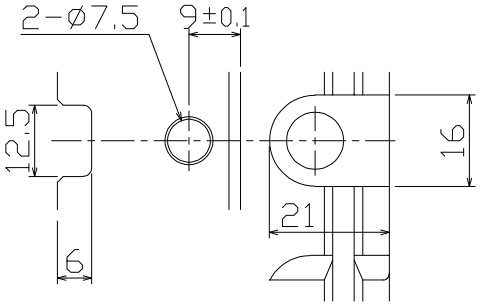

ID MAKER
BALLUFF BIS C-122-04/L
Not supplied by NIKKEN.

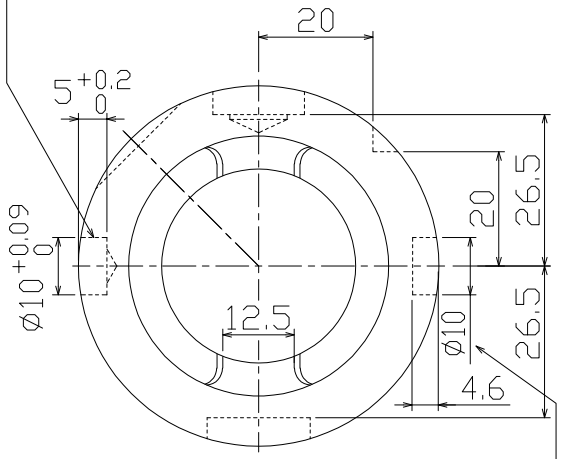

Hole for Balancing

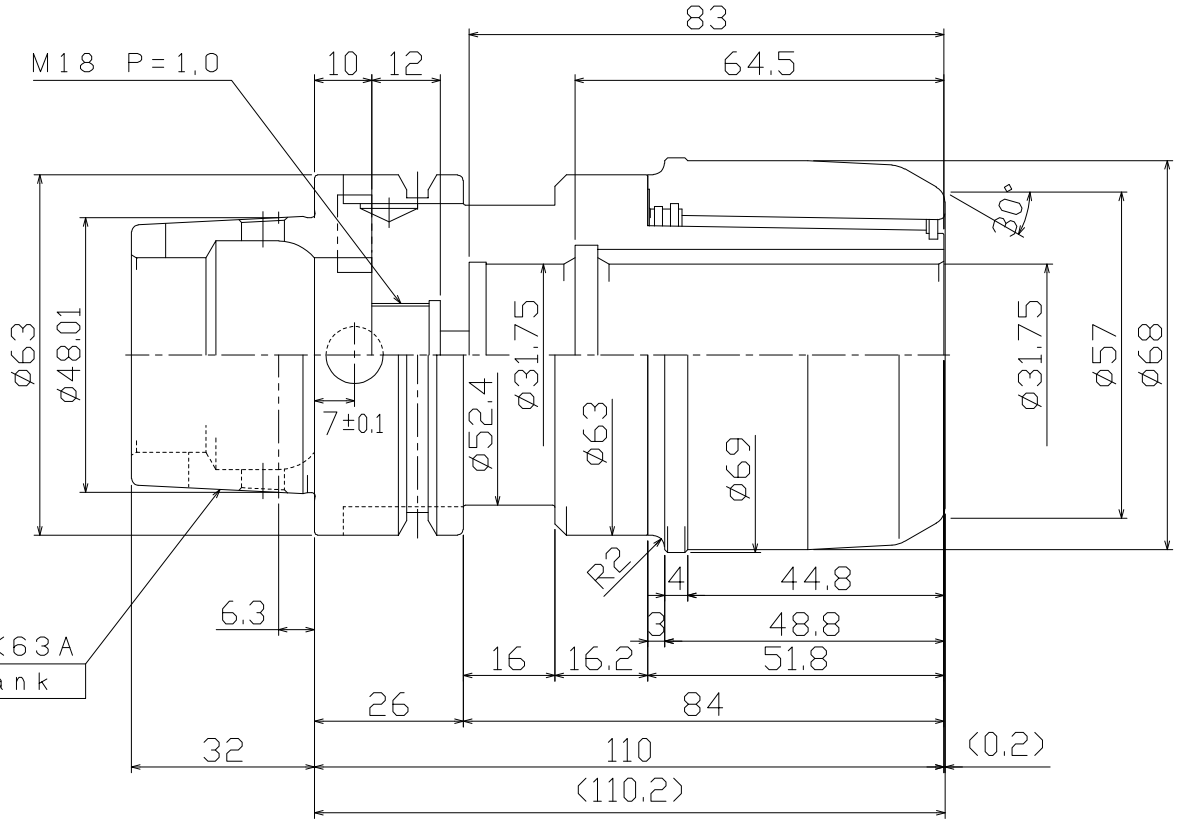

HSK63A Shank

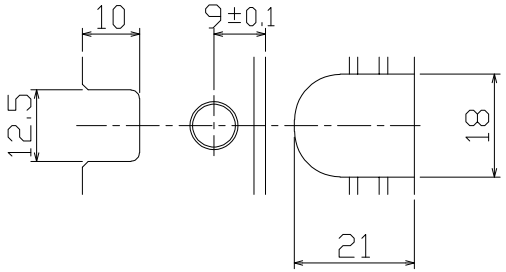

NOTE

MAX. 20,000r/min & G2.5

Center Through:Max.7MPa

GH Handle:GH32 (Option)

KIND C1 1/4SL-3/40	TITLE HIGH SPEED MULTI-LOCK MILLING CHUCK	CUSTOMER		
MACHINE MODEL	CODE NO. HSK63A-C1 1/4-110G-IDU	DESIGNED ISOHAMA	CHECKED	APPROVED
SCALE 1:1	NIKKEN KOSAKUSHO WORKS, LTD.	DIR-NAME	MCA1	
DATE 2022.10.12		DRWG NO.	MCA45-26003/0	