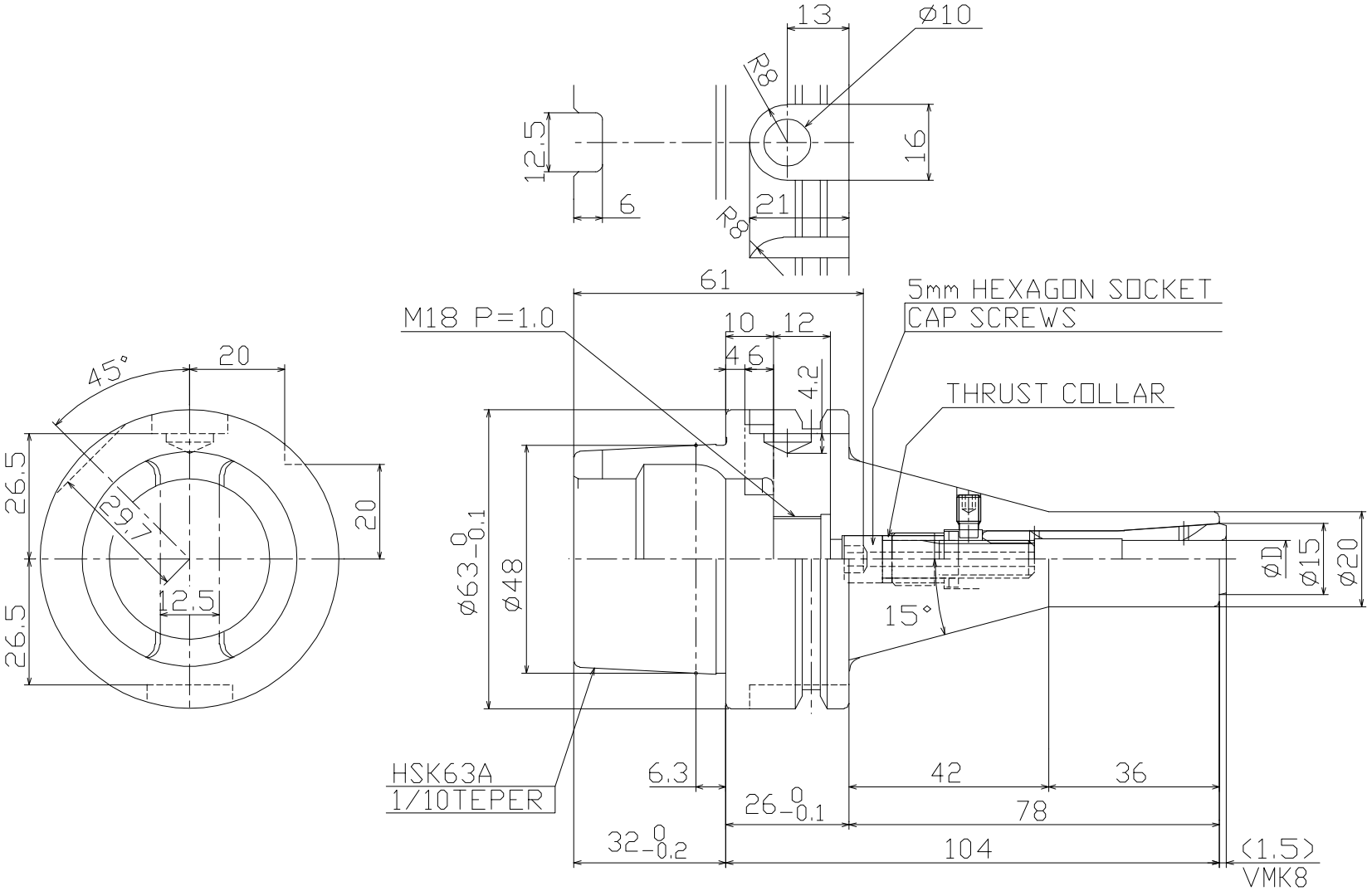

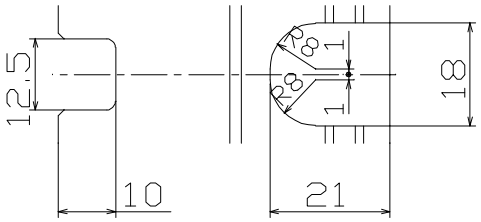

HIGH SPEED 25,000min-1
MAX.BALANCING G2.5

KIND MMC8-A	TITLE MINI-MINI CHUCK	CUSTOMER		
MACHINE MODEL	CODE NO. HSK63A-MMC8C-107-A	DESIGNED Maemura	CHECKED	APPROVED
SCALE 1/1(1/2)	NIKKEN KOSAKUSHO WORKS, LTD.	DIR-NAME	MMA1	
DATE 2010.06.24		DRWG NO.	MMA04-26004/0	