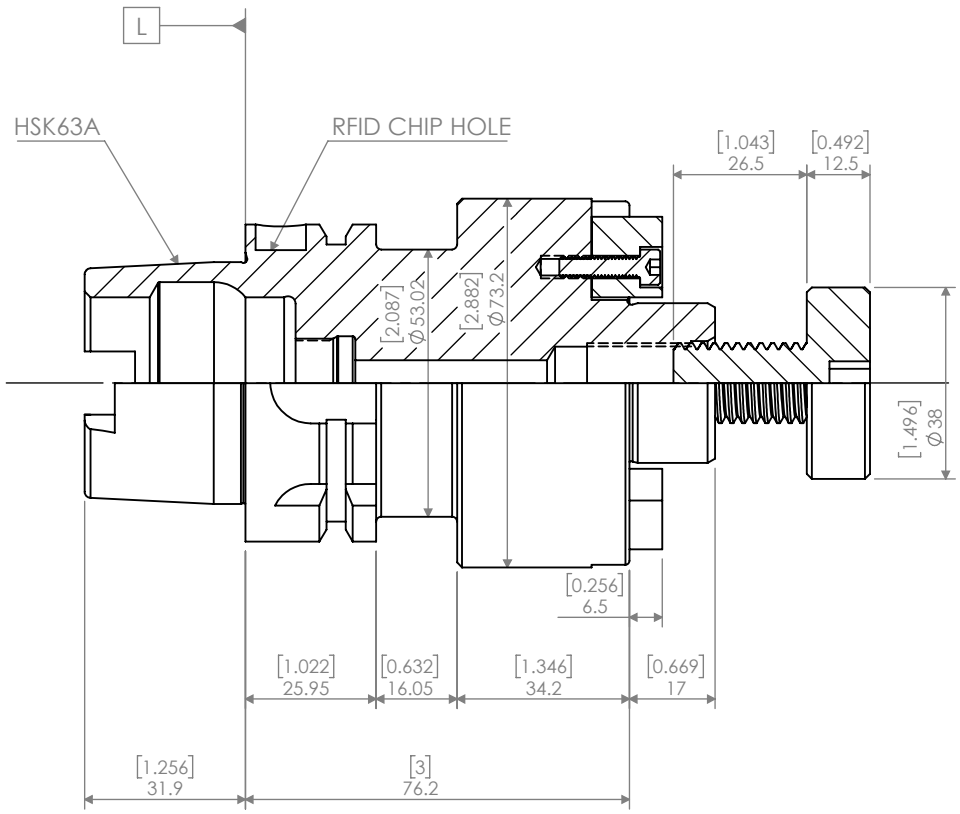

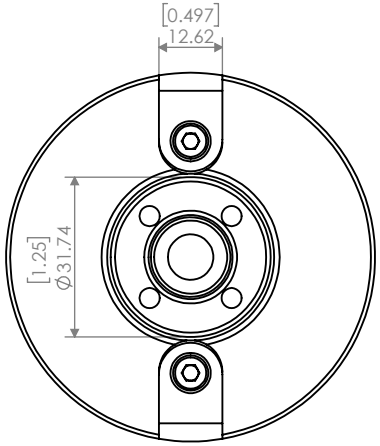

ITEM NO.	PART NUMBER	DESCRIPTION	QTY.
3	A5_8-18	ARBOR SCREW FOR FACE / SHELL MILL HOLDER 1.1/4	1
2	1-1_4-KEYSET	KEYSET FOR FACE / SHELL MILL HOLDER 1.1/4	2
1	HSK63A-SM1250-3.00CP	HSK63A SHELL/FACE MILL HOLDER 1.1/4" IDCHIPHOLE COOLANT PORTS	1

PROPRIETARY AND CONFIDENTIAL

THE INFORMATION CONTAINED IN THIS DRAWING IS THE SOLE PROPERTY OF LYNDEX NIKKEN. ANY REPRODUCTION IN PART OR AS A WHOLE WITHOUT THE WRITTEN PERMISSION OF LYNDEX NIKKEN IS PROHIBITED. DRAWING SUBJECT TO CHANGE WITHOUT NOTICE.

	NAME	DATE
DRAWN	BT	9/28/2021
NOTES:		

HSK63A SHELLMILL HOLDER 1.1/4" IDC.HOLE C.PORTS

LYNDEX NIKKEN

SIZE	DWG. NO.	REV.
A	HSK63A-SM1250-3.00CP	
SCALE 1:1.5		SHEET 1 OF 1

5 4 3 2 1