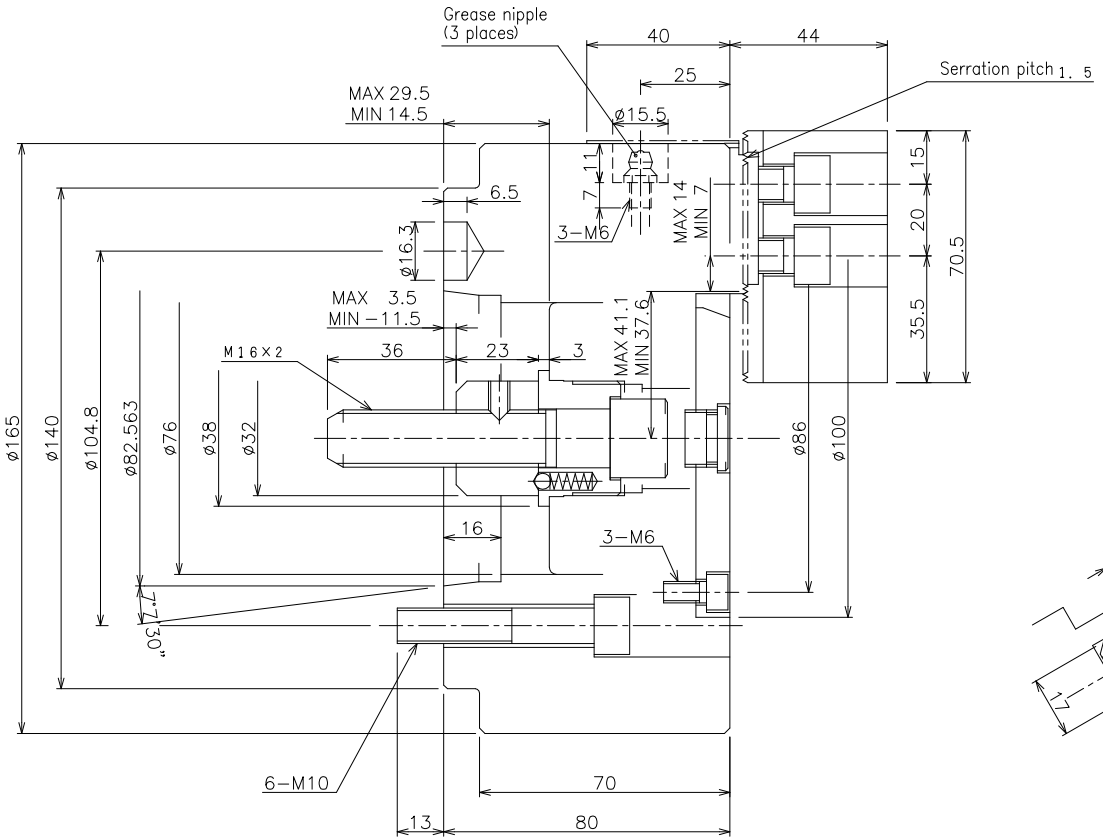

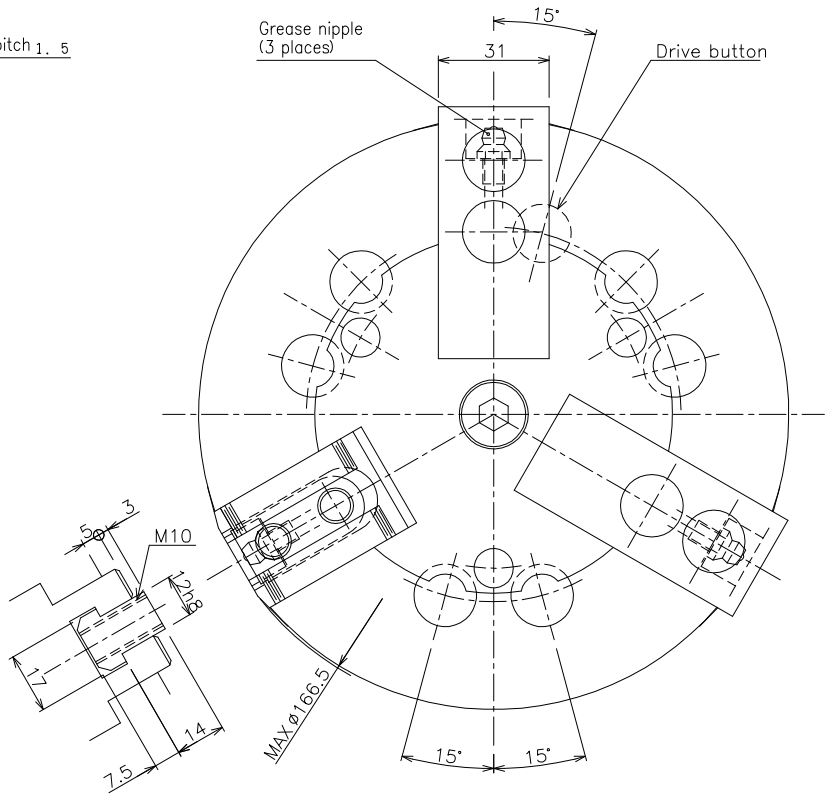

Clamping force characteristic diagram
(Standerd jaw)

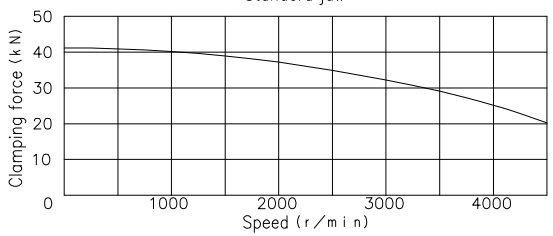

PROPRIETARY AND CONFIDENTIAL

THE INFORMATION CONTAINED IN THIS DRAWING IS THE SOLE PROPERTY OF LYNDEX NIKKEN. ANY REPRODUCTION IN PART OR AS A WHOLE WITHOUT THE WRITTEN PERMISSION OF LYNDEX NIKKEN IS PROHIBITED. DRAWING SUBJECT TO CHANGE WITHOUT NOTICE.

	NAME	DATE
DRAWN		

NOTES:

Howa H01MA6-A5J Std Closed Bore 3Jaw

LYNDEX NIKKEN

SIZE A3 | HW-06C-HS-A5 (H01MA6SA5J) | REV.

SCALE 1:1 | SHEET 1 OF 1

5 4 3 2 1