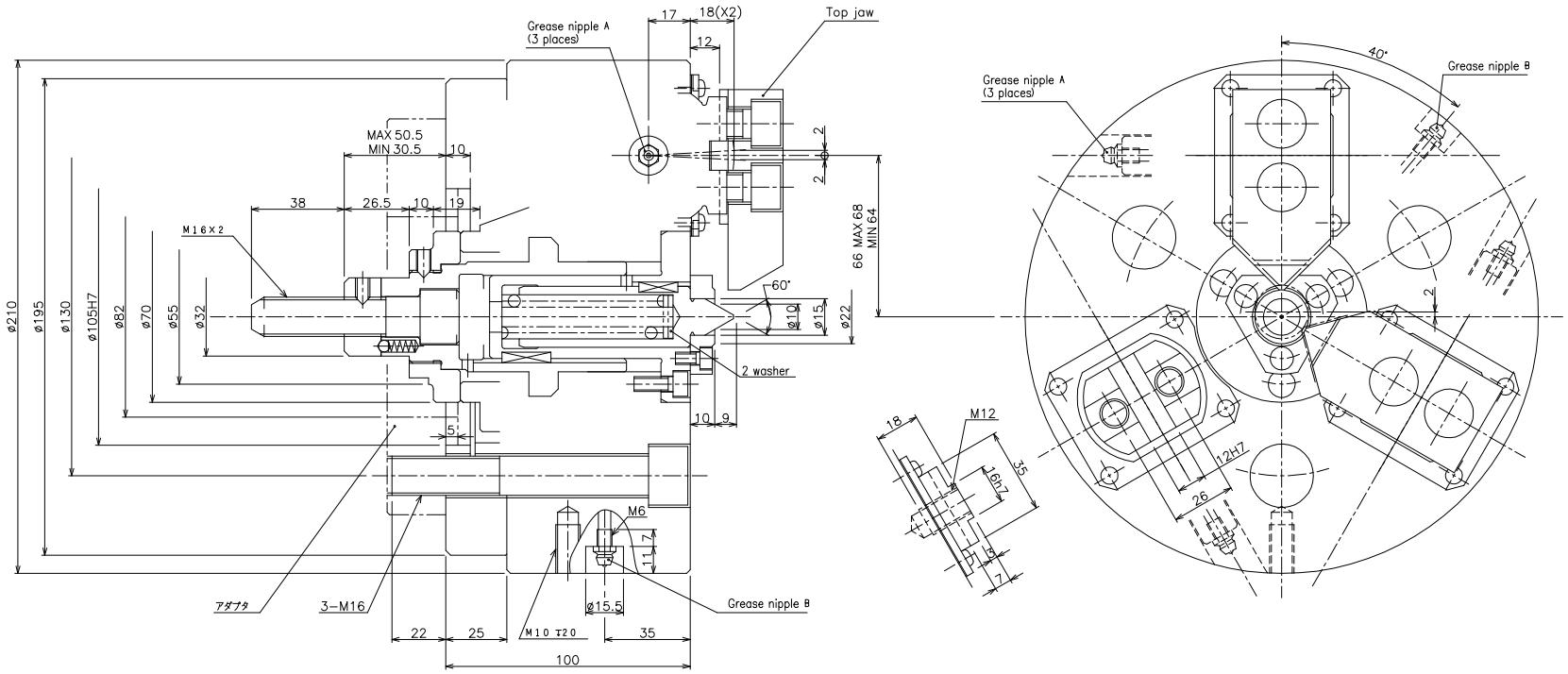

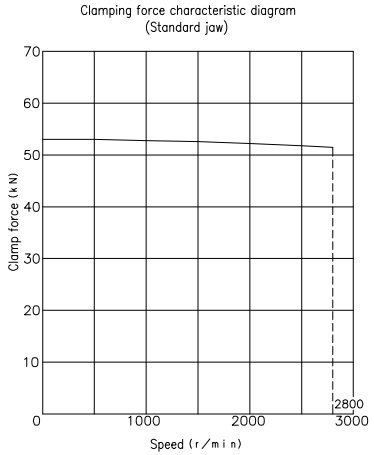

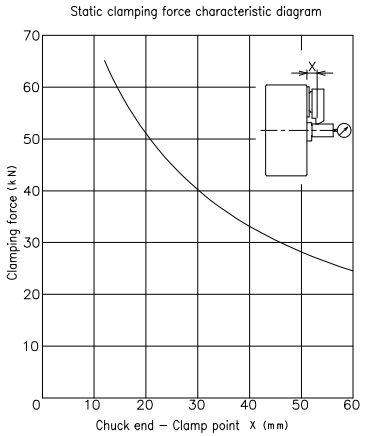

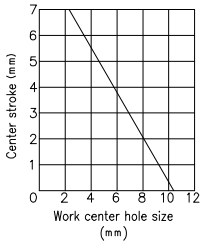

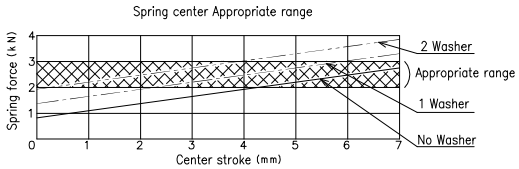

PROPRIETARY AND CONFIDENTIAL

THE INFORMATION CONTAINED IN THIS DRAWING IS THE SOLE PROPERTY OF LYNDEX NIKKEN. ANY REPRODUCTION IN PART OR AS A WHOLE WITHOUT THE WRITTEN PERMISSION OF LYNDEX NIKKEN IS PROHIBITED. DRAWING SUBJECT TO CHANGE WITHOUT NOTICE.

	NAME	DATE	Howa H055M8 Closed Bore3J Comp LiveCtr
DRAWN			LYNDEX NIKKEN
NOTES:			SIZE A1 — HW-08C-COLSJ (H055M8) — REV.
			SCALE 1:1 — SHEET 1 OF 1