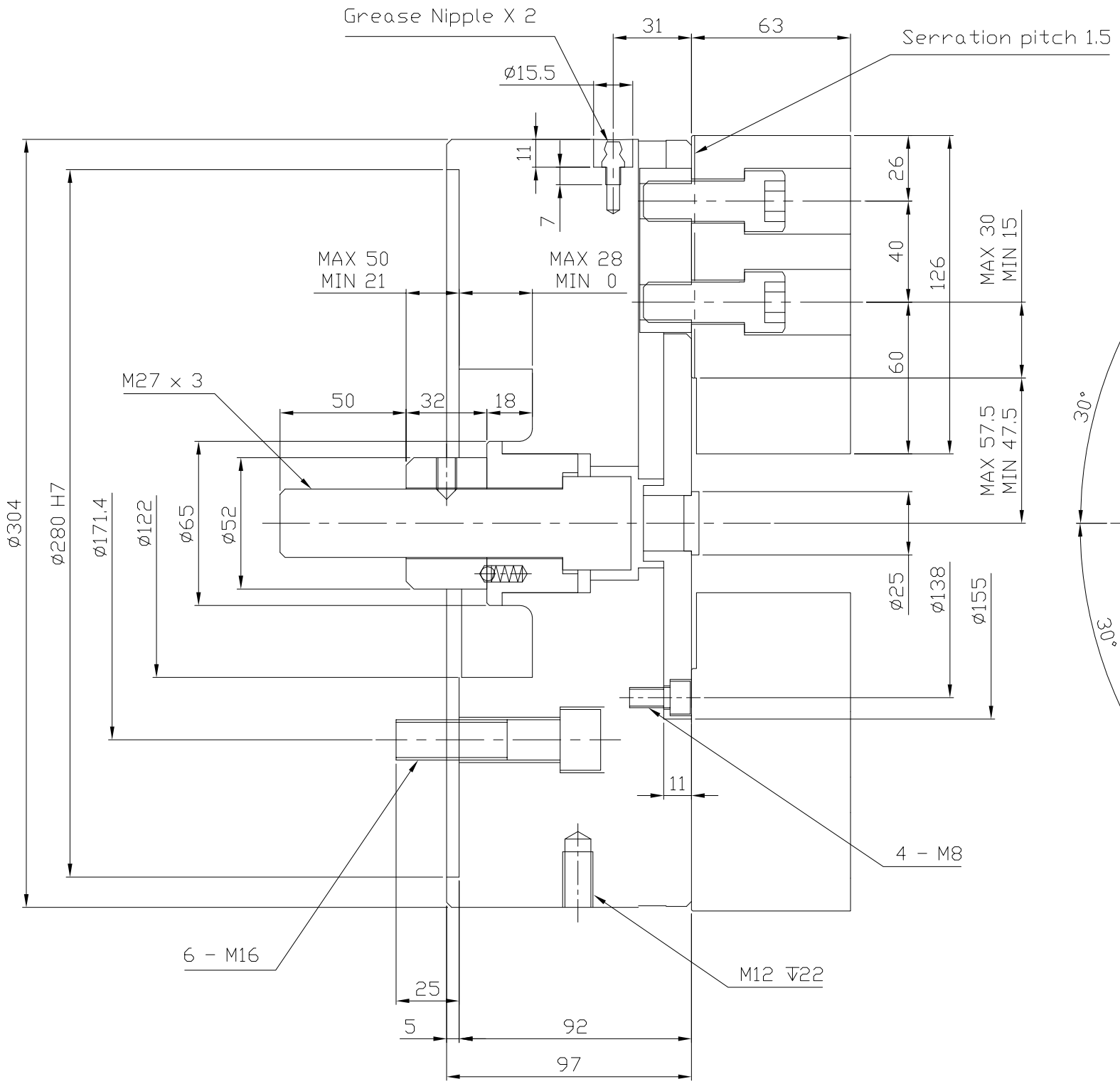

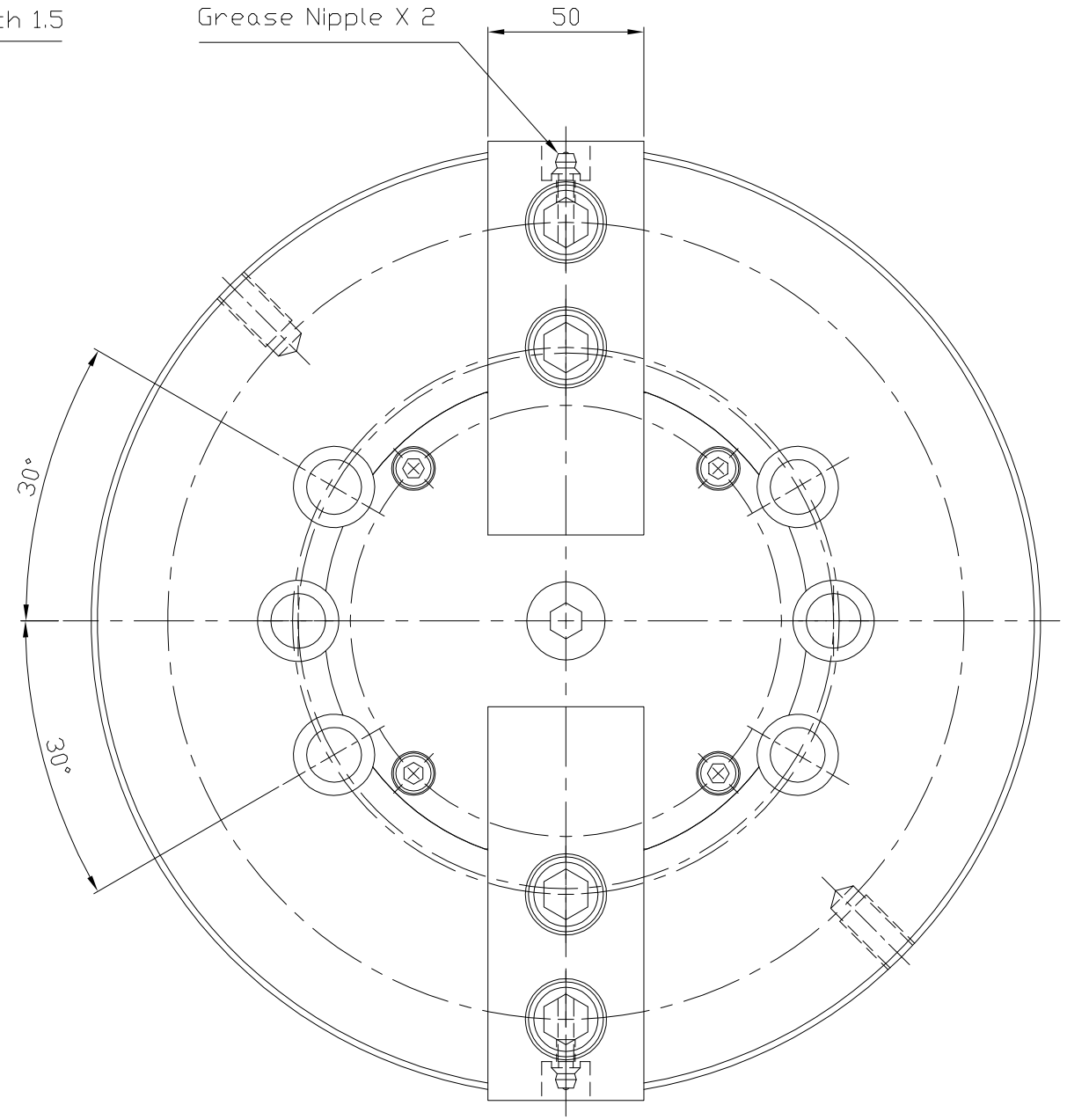

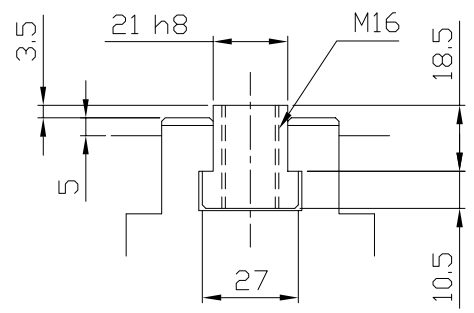

H024M12
(HW-12C-2J-LS)

PROPRIETARY AND CONFIDENTIAL

THE INFORMATION CONTAINED IN THIS DRAWING IS THE SOLE PROPERTY OF LYNDEX NIKKEN. ANY REPRODUCTION IN PART OR AS A WHOLE WITHOUT THE WRITTEN PERMISSION OF LYNDEX NIKKEN IS PROHIBITED. DRAWING SUBJECT TO CHANGE WITHOUT NOTICE.

	NAME	DATE
DRAWN	AR	02/25/2022

NOTES:

Max. rpm : 2000
Mass : 54 kg

DESC.

LYNDEX NIKKEN

SIZE	DWG. NO.	REV.
A3		
SCALE 1:2		SHEET 1 OF 1

5 4 3 2 1