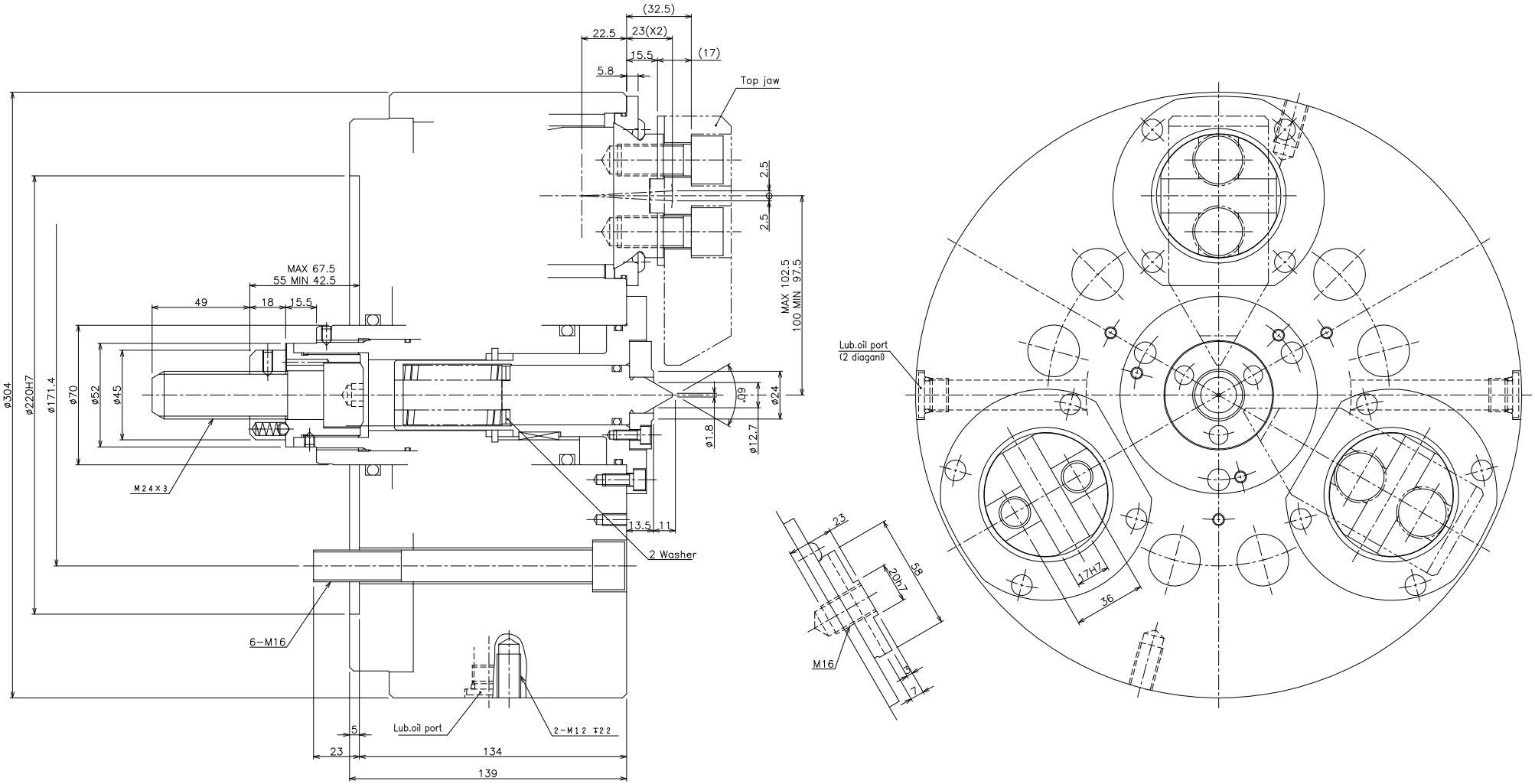

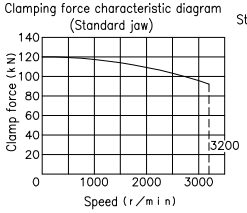

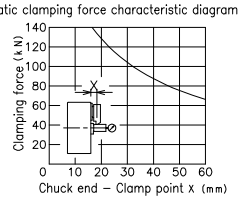

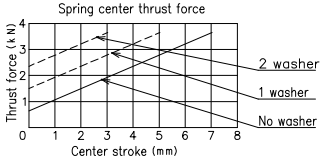

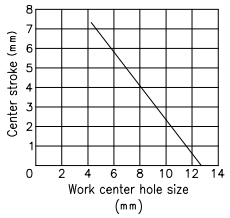

PROPRIETARY AND CONFIDENTIAL

THE INFORMATION CONTAINED IN THIS DRAWING IS THE SOLE PROPERTY OF LYNDEX NIKKEN. ANY REPRODUCTION IN PART OR AS A WHOLE WITHOUT THE WRITTEN PERMISSION OF LYNDEX NIKKEN IS PROHIBITED. DRAWING SUBJECT TO CHANGE WITHOUT NOTICE.

	NAME	DATE
DRAWN		
NOTES:		

Howa H3YS12 OsdBore3J Comp LiveCtr

LYNDEX NIKKEN

SIZE A1 | HW-12C-C0LSJ-S (H3YS12) | REV.

SCALE 1:1 | SHEET 1 OF 1