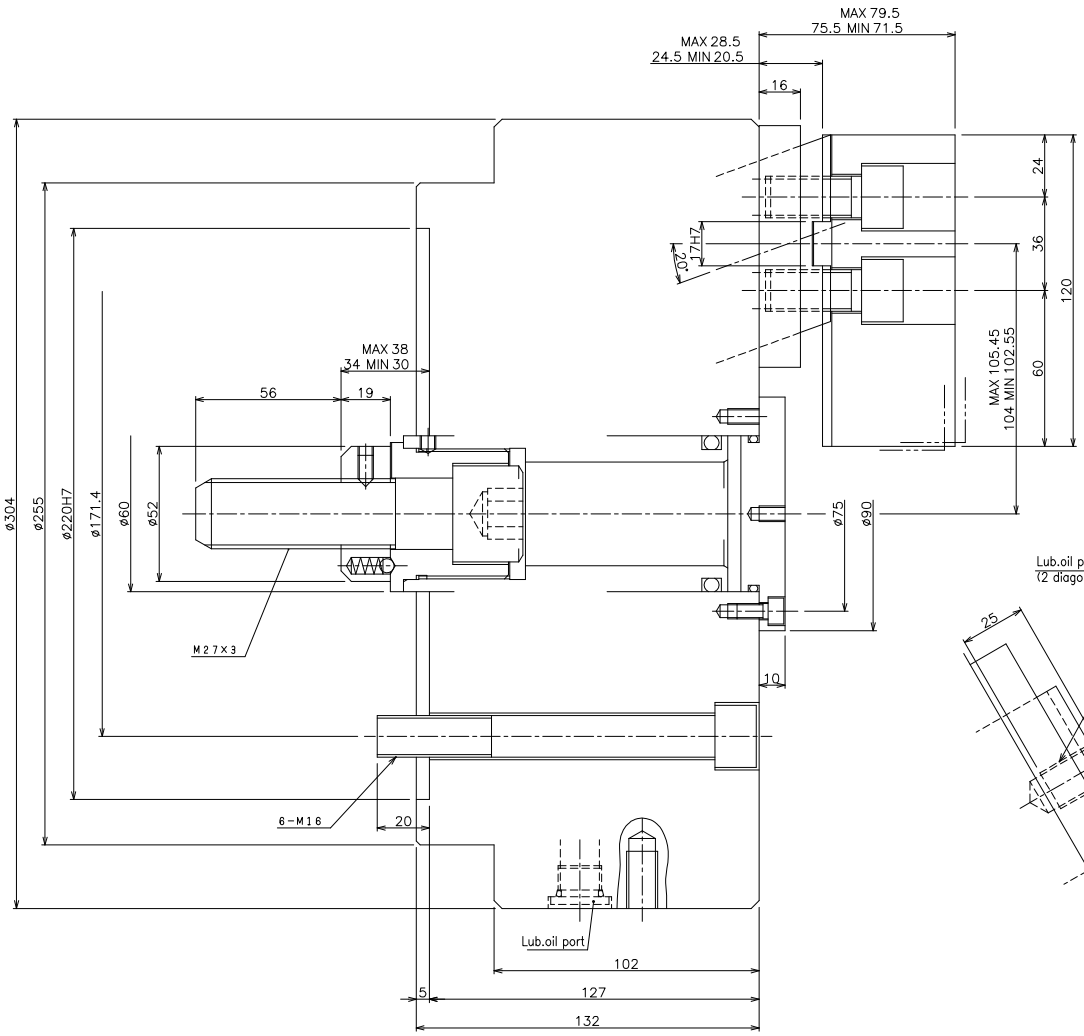

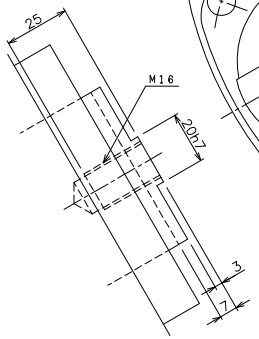

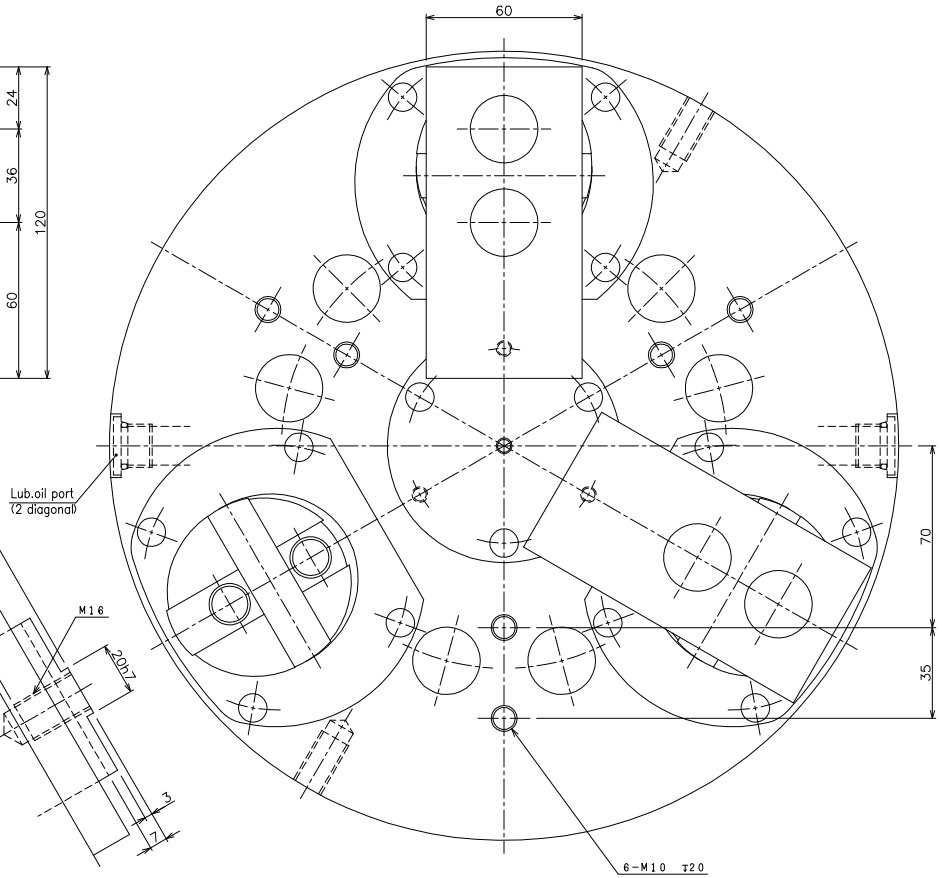

Clamping force characteristic diagram
(Standard jaw)

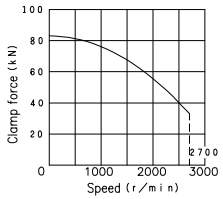

PROPRIETARY AND CONFIDENTIAL

THE INFORMATION CONTAINED IN THIS DRAWING IS THE SOLE PROPERTY OF LYNDEX NIKKEN. ANY REPRODUCTION IN PART OR AS A WHOLE WITHOUT THE WRITTEN PERMISSION OF LYNDEX NIKKEN IS PROHIBITED. DRAWING SUBJECT TO CHANGE WITHOUT NOTICE.

	NAME	DATE
DRAWN		
NOTES:		

Howa H3DS12 3Jaw Sealed Draw Down

LYNDEX NIKKEN

SIZE: A1 | HW-12C-D0D-S (H3DS12) | REV.

SCALE 1:1 | SHEET 1 OF 1