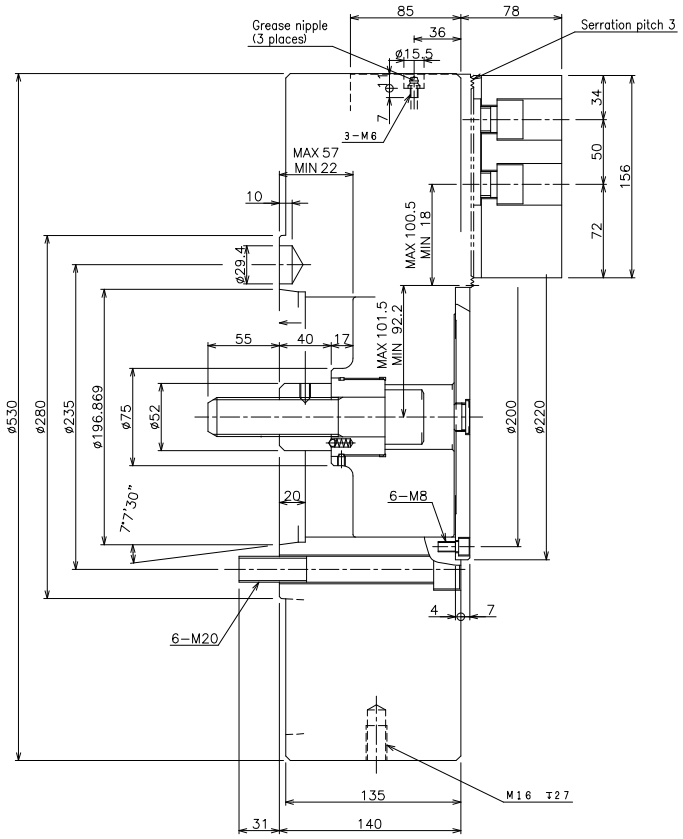

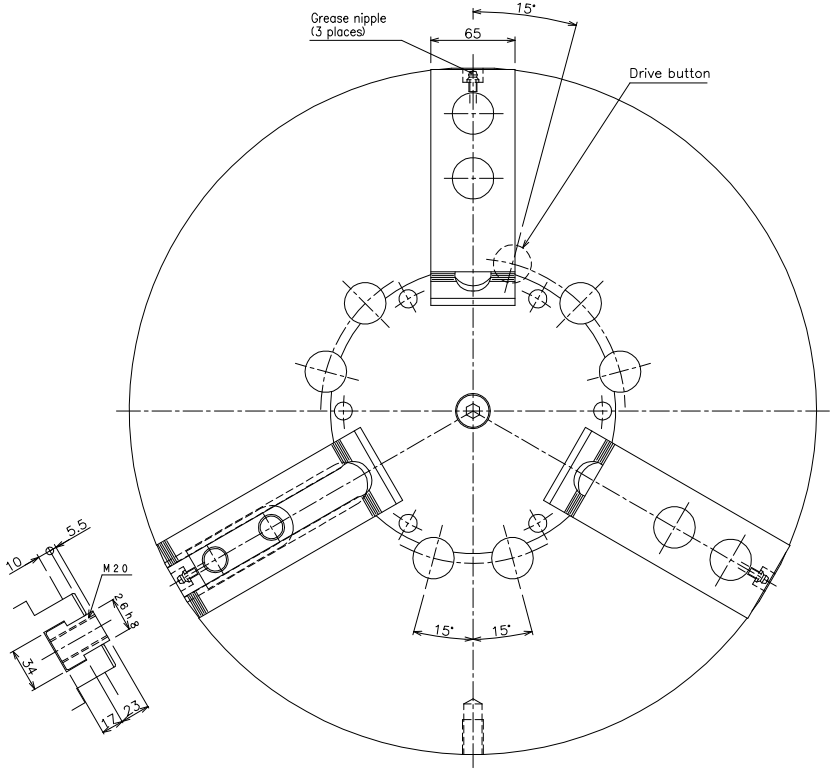

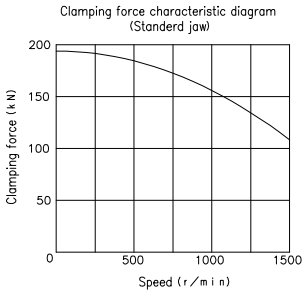

PROPRIETARY AND CONFIDENTIAL

THE INFORMATION CONTAINED IN THIS DRAWING IS THE SOLE PROPERTY OF LYNDEX NIKKEN. ANY REPRODUCTION IN PART OR AS A WHOLE WITHOUT THE WRITTEN PERMISSION OF LYNDEX NIKKEN IS PROHIBITED. DRAWING SUBJECT TO CHANGE WITHOUT NOTICE.

	NAME	DATE
DRAWN		

NOTES:

Howa HOIMA21 Closed Bore 3Jaw

LYNDEX NIKKEN

SIZE		REV.
A1	HW-21C-HS-A11-3S (HO1MA21A11J)	
SCALE 1:2		SHEET 1 OF 1