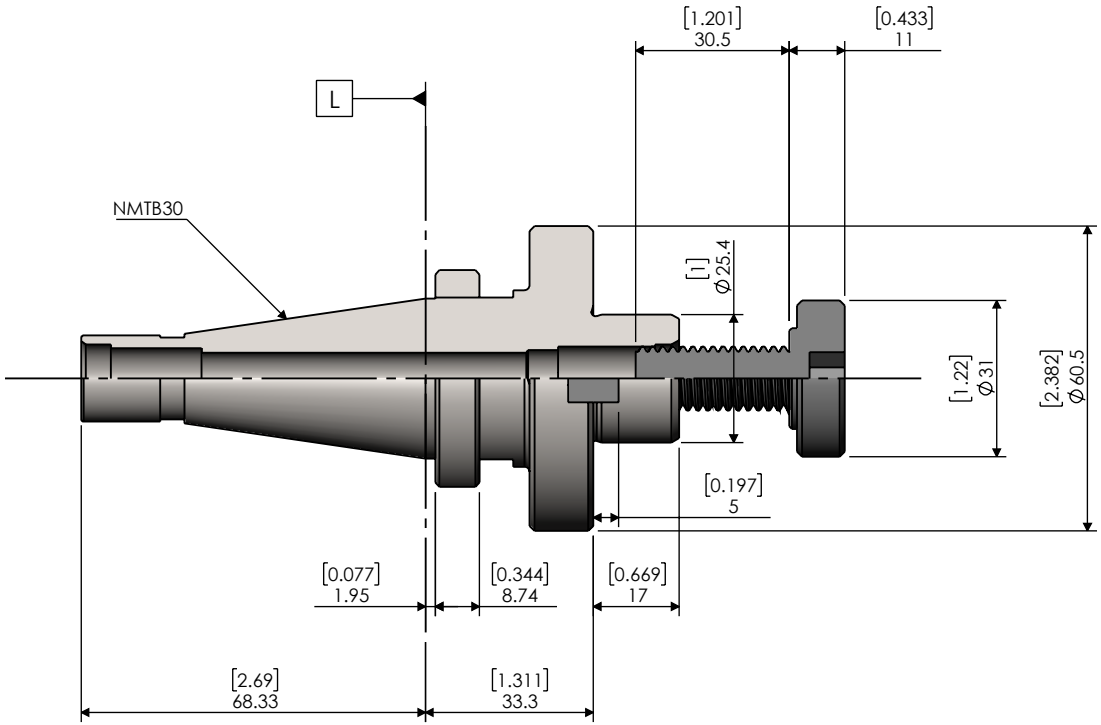

SECTION A-A

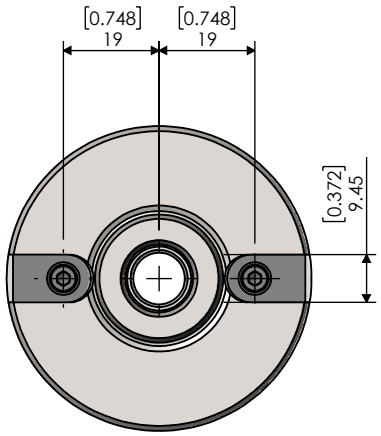

ITEM NO.	PART NUMBER	DESCRIPTION	QTY.
3	A1_2-20	ARBOR SCREW FOR FACE / SHELL MILL HOLDER 1IN	1
2	1-KEYSET	KEYSET FOR FACE / SHELL MILL HOLDER 1IN	2
1	N3001-1000-1.31	NMTB30 SHELL/FACE MILL HOLDER 1"	1

PROPRIETARY AND CONFIDENTIAL

THE INFORMATION CONTAINED IN THIS DRAWING IS THE SOLE PROPERTY OF LYNDEX NIKKEN. ANY REPRODUCTION IN PART OR AS A WHOLE WITHOUT THE WRITTEN PERMISSION OF LYNDEX NIKKEN IS PROHIBITED. DRAWING SUBJECT TO CHANGE WITHOUT NOTICE.

NOTES:

NMTB30 SHELL/FACE MILL HOLDER 1"

LYNDEX NIKKEN

SIZE	DWG. NO.	REV.
A	N3001-1000-1.31	1
SCALE 1:1.5		SHEET 1 OF 1

5 4 3 2 1