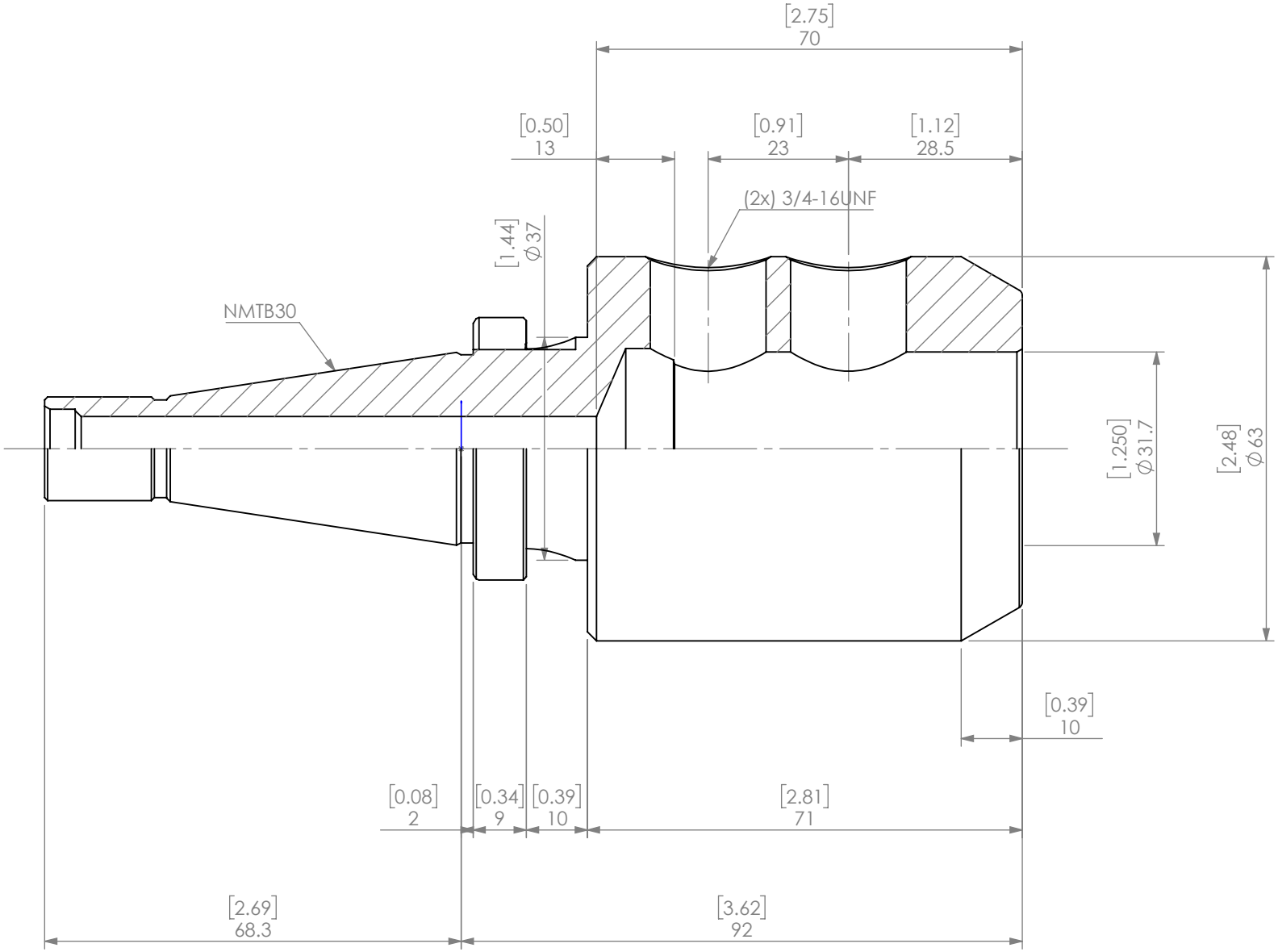

PROPRIETARY AND CONFIDENTIAL

THE INFORMATION CONTAINED IN THIS DRAWING IS THE SOLE PROPERTY OF LYNDEX NIKKEN. ANY REPRODUCTION IN PART OR AS A WHOLE WITHOUT THE WRITTEN PERMISSION OF LYNDEX NIKKEN IS PROHIBITED. DRAWING SUBJECT TO CHANGE WITHOUT NOTICE.

	NAME	DATE
DRAWN	AM	01/28/2021

NOTES:

NMTB30 END MILL HOLDER 1 1/4"

LYNDEX NIKKEN

SIZE	DWG. NO.	REV.
A	N3006-1250-3.62	
SCALE 1:1		SHEET 1 OF 1

5 4 3 2 1