Symbol	Date	Rev. by	Notice	Check
1 x 1	230120	Y. M	IMPROVE	
2 x				
3 x				
4 x				

NIKKEN KOSAKUSHO WORKS., LTD. All Rights Reserved.

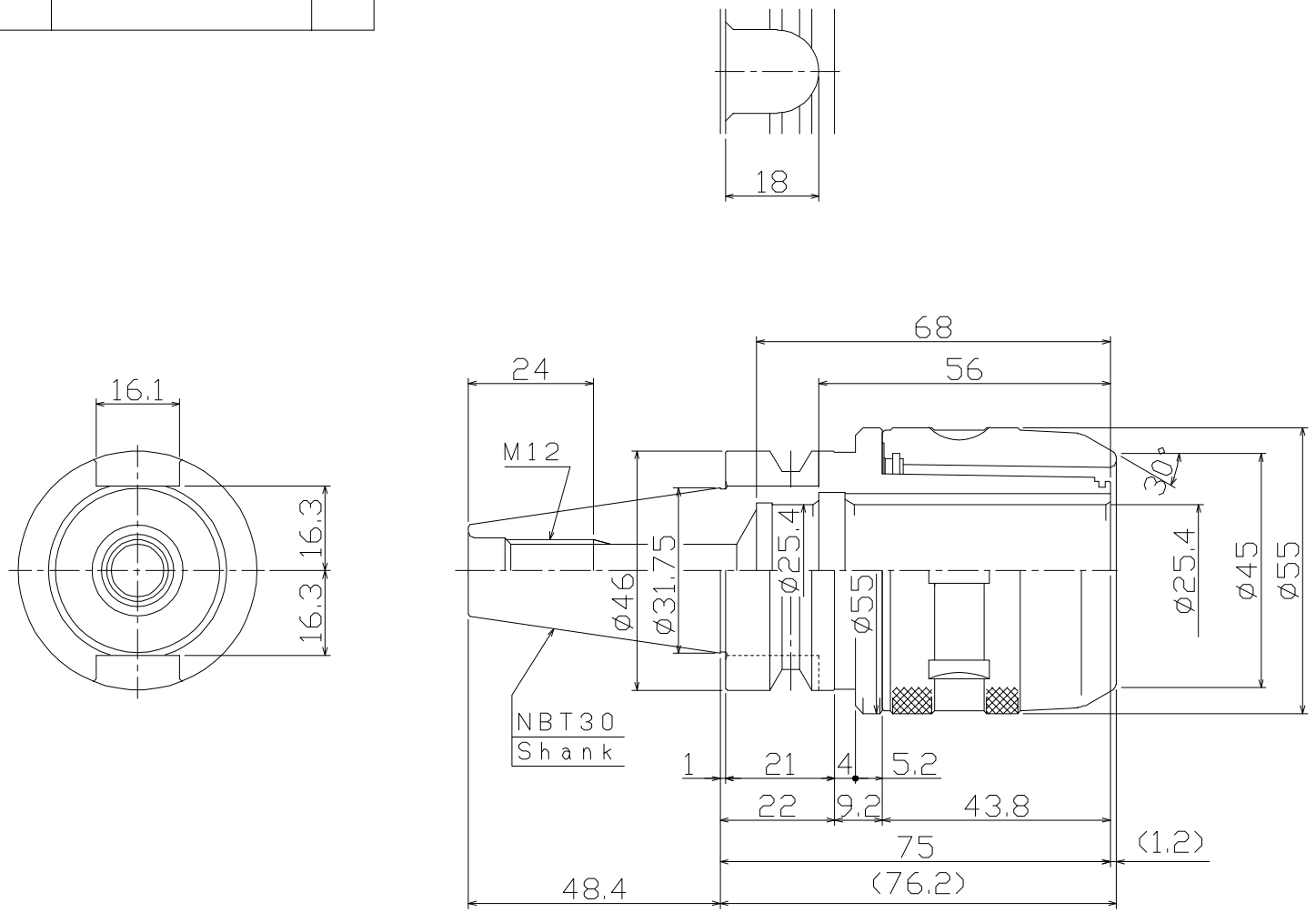

NOTE 1

Center Through:Max.7MPa

Spanner:9HC22 (Option)

KIND C1SL-1B	TITLE MULTI LOCK MILLING CHUCK	CUSTOMER		
MACHINE MODEL	CODE NO. NBT30-C1-75	DESIGNED Isohama	CHECKED	APPROVED
SCALE 1:1	NIKKEN KOSAKUSHO WORKS, LTD.	DIR-NAME	MCA1	
DATE 2022.02.14		DRWG NO.	MCA16-40002/1	