Symbol	Date	Rev,by	Notice	Check
1 x				
2 x				
3 x				
4 x				

NIKKEN KOSAKUSHO WORKS., LTD. All Rights Reserved.

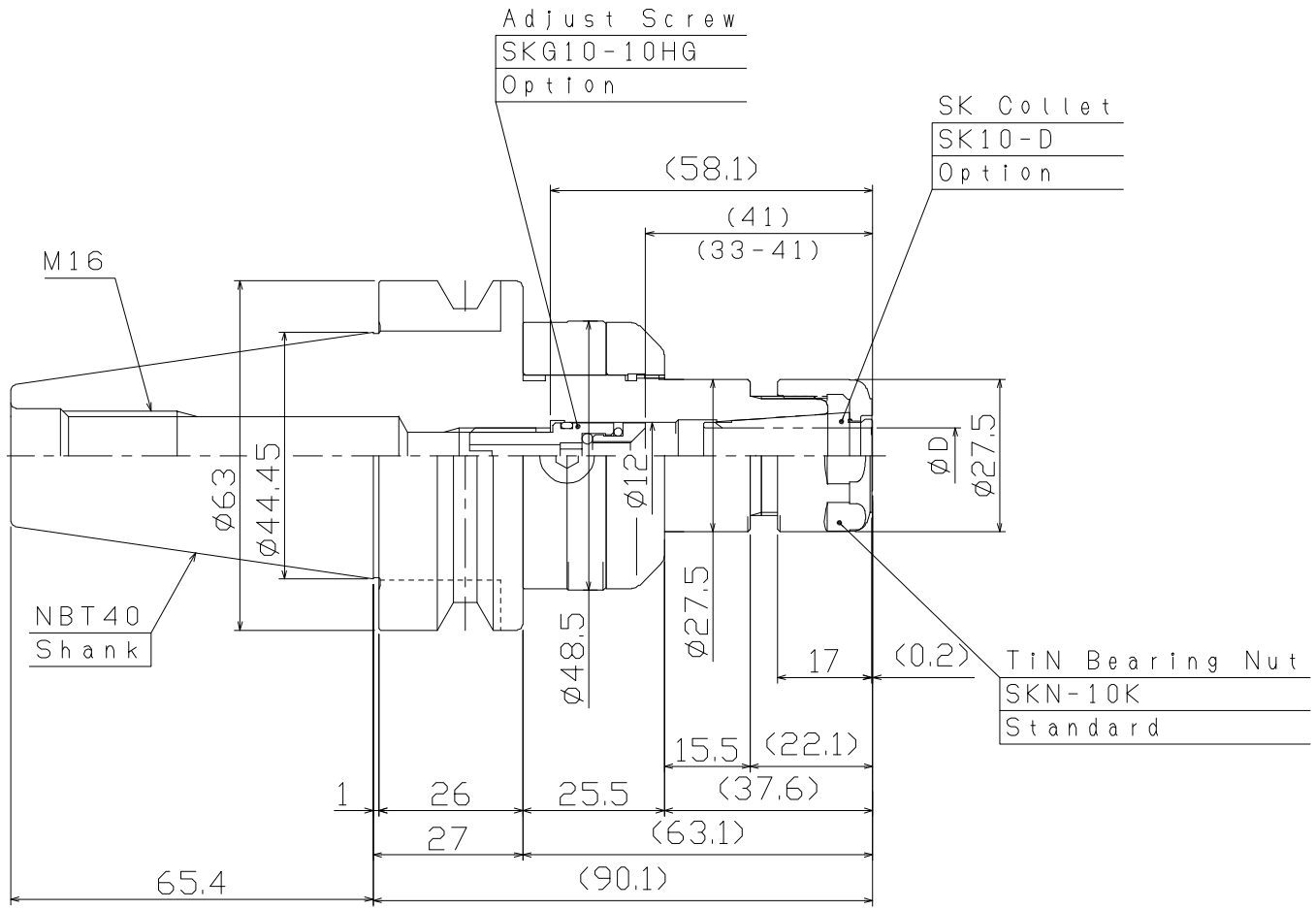

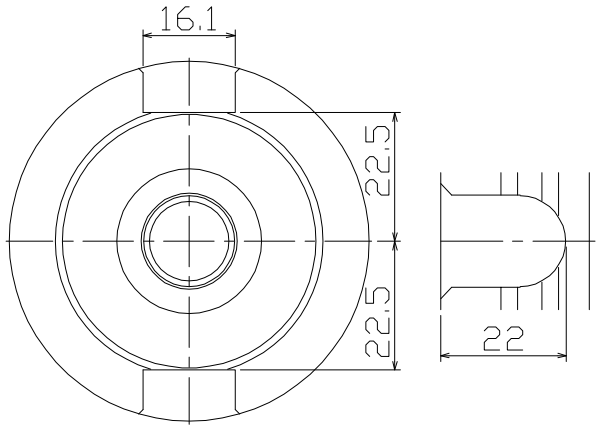

NOTE

Spanner:SKL-10 (OPTION)

Wrench to adjust:9ZFL (OPTION)

Center Through MAX. 7MPa

KIND	TITLE	CUSTOMER		
SZF10-1HB	NBT ZERO FIT TYPE SLIM CHUCK			
MACHINE MODEL	CODE NO.	DESIGNED	CHECKED	APPROVED
	NBT40-SZF10C-90	MITSUSHIO		
SCALE 1:1	NIKKEN KOSAKUSHO WORKS, LTD.	DIR-NAME	SZA1	
DATE 2022.03.28		DRWG NO.	SZA11-41005/0	