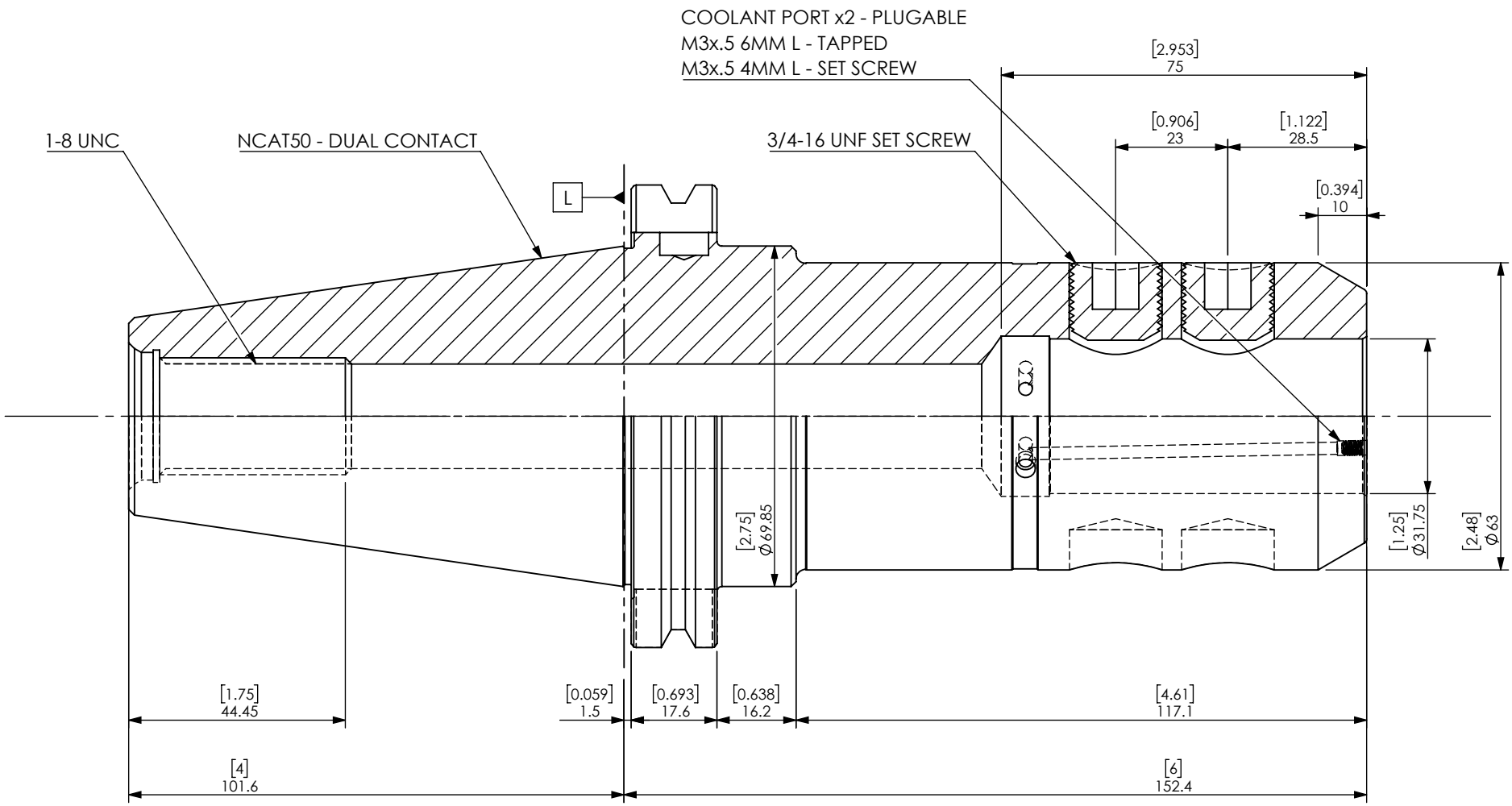

ITEM NO.	PART NUMBER	DESCRIPTION	QTY.
3	M3X4L	M3x.5 4MML SET SCREW	2
2	S3_4-16X11_16	3/4-16 UNF SET SCREW	2
1	NC5006-1250-6.00CP	NCAT50 DUAL CONTACT 1 1/4" END MILL HOLDER 6" L	1

PROPRIETARY AND CONFIDENTIAL

THE INFORMATION CONTAINED IN THIS DRAWING IS THE SOLE PROPERTY OF LYNDEX NIKKEN. ANY REPRODUCTION IN PART OR AS A WHOLE WITHOUT THE WRITTEN PERMISSION OF LYNDEX NIKKEN IS PROHIBITED. DRAWING SUBJECT TO CHANGE WITHOUT NOTICE.

	NAME	DATE
DRAWN	SM	4/27/2022

NOTES:

NCAT50 DUAL CONTACT 1 1/4" END MILL HOLDER - C PORTS

LYNDEX NIKKEN

SIZE A | DWG. NO. NC5006-1250-6.00CP | REV.

SCALE 1:1.25 | SHEET 1 OF 1

5 4 3 2 1