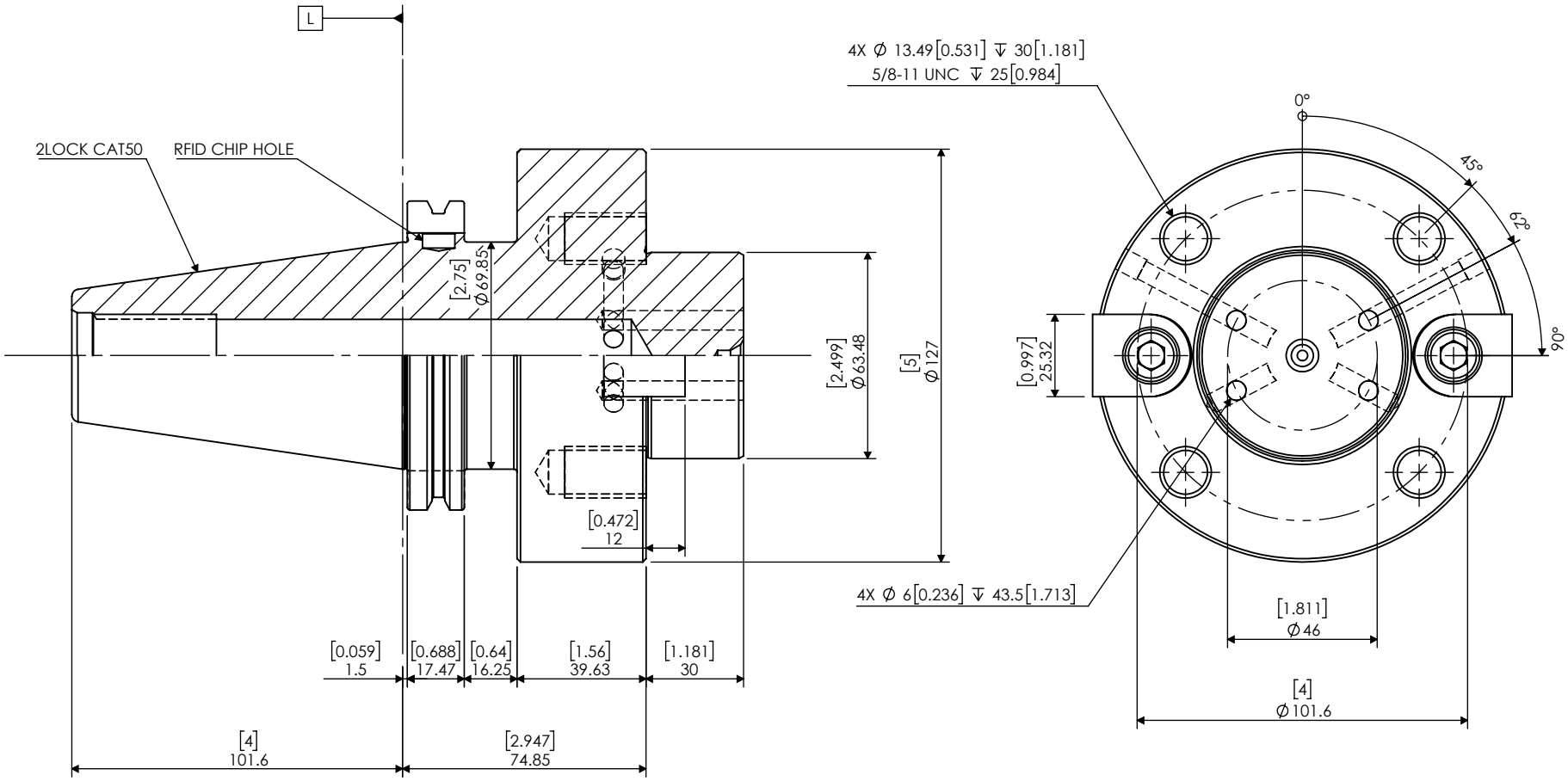

ITEM NO.	PART NUMBER	DESCRIPTION	QTY.
2	2-1_2-KEYSET	KEYSET FOR FACE / SHELL MILL HOLDER 2.1/2	2
1	NC50F1-2500-2.95CP	NCAT50 DUAL CONTACT SHELL/FACE MILL HOLDER 2.1/2" COOLANT PORTS	1

PROPRIETARY AND CONFIDENTIAL

THE INFORMATION CONTAINED IN THIS DRAWING IS THE SOLE PROPERTY OF LYNDEX NIKKEN. ANY REPRODUCTION IN PART OR AS A WHOLE WITHOUT THE WRITTEN PERMISSION OF LYNDEX NIKKEN IS PROHIBITED. DRAWING SUBJECT TO CHANGE WITHOUT NOTICE.

	NAME	DATE
DRAWN	BT	12/9/2021

NOTES:

NCAT50 Dual Contact FaceMill Holder 2.1/2" C.Ports

LYNDEX NIKKEN

SIZE	DWG. NO.	REV.
A	NC50F1-2500-2.95CP	
SCALE 1:2		SHEET 1 OF 1

5 4 3 2 1