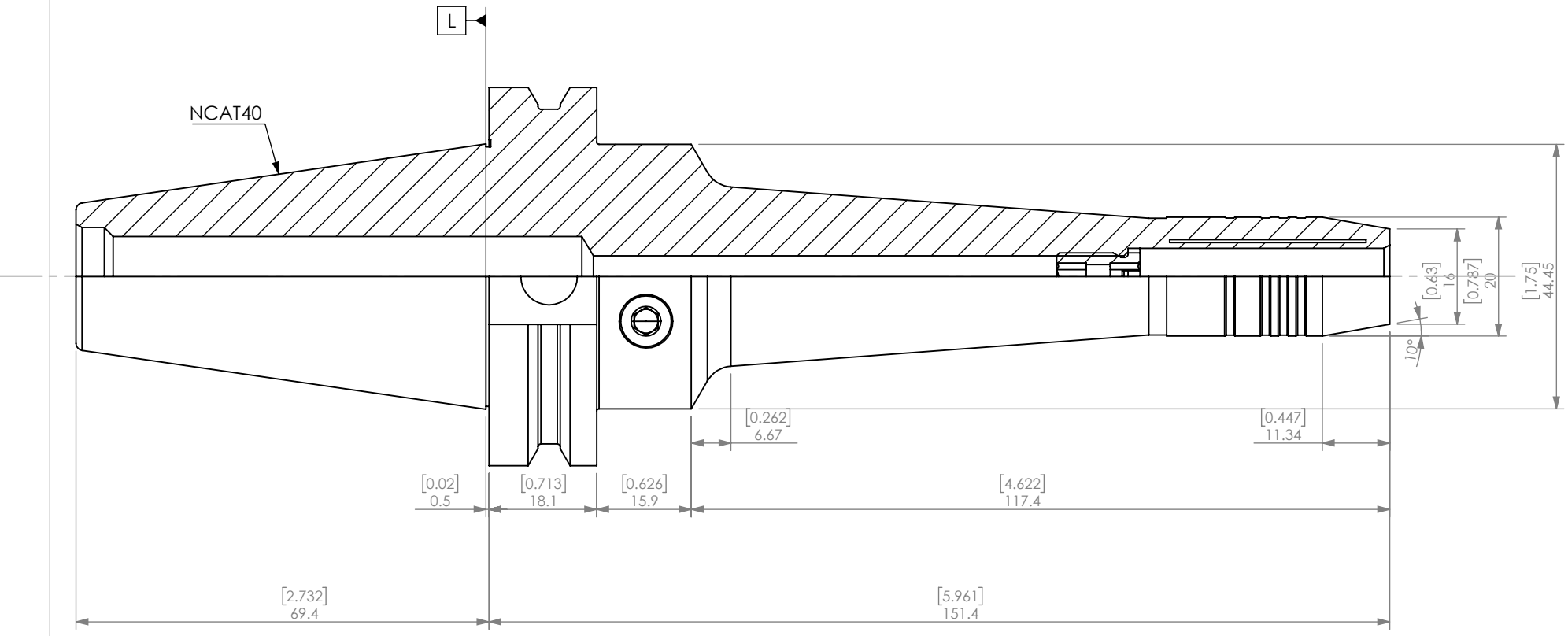

ITEM NO.	PART NUMBER	DESCRIPTION	QTY.
3	M8-P1.0	BACK UP SCREW [M8-P1.0]	1
2	HC-CLAMPSCREW-M8X1.25X14	CLAMP SCREW M8-P1.25 L14 FOR HYD CHUCK [05.036.901]	1
1	NCAT40-HC0375-6.00SL	NCAT40 Dual Contact Hydraulic Chuck 3/8" Slim Line	1

PROPRIETARY AND CONFIDENTIAL

THE INFORMATION CONTAINED IN THIS DRAWING IS THE SOLE PROPERTY OF LYNDEX NIKKEN. ANY REPRODUCTION IN PART OR AS A WHOLE WITHOUT THE WRITTEN PERMISSION OF LYNDEX NIKKEN IS PROHIBITED. DRAWING SUBJECT TO CHANGE WITHOUT NOTICE.

	NAME	DATE
DRAWN	WN	3/18/2022

NOTES:

NCAT40 DUAL CONTACT HYDRAULIC CHUCK 3/8" SLIM LINE

LYNDEX NIKKEN

SIZE A | DWG. NO. NCAT40-HC0375-6.00SL | REV.

SCALE 1:1 | SHEET 1 OF 1

5 4 3 2 1